CLACKAMAS COUNTY

DAN JOHNSON
DIRECTOR

DEPARTMENT OF TRANSPORTATION AND DEVELOPMENT
DEVELOPMENT SERVICES BUILDING
150 BEAVERCREEK ROAD OREGON CITY, OR 97045

August 10, 2023 BCC Agenda Date/Item:_____

Board of County Commissioners
Clackamas County

Approval of a Contract with JQ Construction Incorporated for the #2023-49 Tickle Creek (427th Ave) Culvert Replacement Project. Contract value is $399,970.00 until project completion. Funding through County Road Funds. No County General Funds are involved.

Previous Board Action/Review	Briefed at Issues: August 8, 2023		
Performance Clackamas	The project will build a strong infrastructure.		
Counsel Review	Yes - Andrew Naylor	**Procurement Review**	Yes
Contact Person	Jonathan Hangartner, PM	**Contact Phone**	503-742-4649

EXECUTIVE SUMMARY: In August of 2022, a large washout underneath the road was discovered at the culvert crossing of Tickle Creek underneath 427th Avenue, which is located southeast of the City of Sandy. The washout was a result of a failed culvert. The road was immediately closed, and will remain closed until the culvert is replaced and the roadway repaired.

The final design of a replacement culvert, associated roadway repair and environmental permitting was accomplished through direct appointment and on-call consultant contracts. The final design, approved and permitted, is a 10-ft diameter corrugated metal pipe culvert meeting environmental and Oregon Department of Fish and Wildlife fish passage requirements. Once construction of the project is complete, the road will be re-opened to traffic. Clackamas County Road Funds will be responsible for the entirety of the construction contract.

For Filing Use Only

PROCUREMENT PROCESS: The project was advertised in accordance with ORS and LCRB Rules on May 30, 2023, through Invitation to Bid 2023-49. Proposals were publicly opened on June 21, 2023. The County received six (6) bid proposals in response and JQ Construction Incorporated was the apparent low bidder. After a review of the bid proposals, contracting with JQ Construction Incorporated was determined to be in the best interest of the county based on an evaluation of the bid proposals.

RECOMMENDATION: Staff respectfully recommends that the Board of County Commissioners approve and sign this contract with JQ Construction Incorporated for the Tickle Creek (427th Ave) Culvert Replacement Project.

Respectfully submitted,

Dan Johnson

Dan Johnson, Director
Department of Transportation & Development

CLACKAMAS COUNTY
PUBLIC IMPROVEMENT CONTRACT

Contract #8269

This Public Improvement Contract (the "Contract"), is made by and between the Clackamas County, a political subdivision of the State of Oregon, hereinafter called "Owner," and **JQ Construction Incorporated**, hereinafter called the "Contractor" (collectively the "Parties"), shall become effective on the date this Contract has been signed by all the Parties and all County approvals have been obtained, whichever is later.

Project Name: # 2023-51 Tickle Creek (427th Ave) Culvert Replacement

1. Contract Price, Contract Documents and Work.

The Contractor, in consideration of the sum of **Three Hundred Ninety-Nine Thousand Nine Hundred Seventy Dollars ($399,970.00)** (the "Contract Price"), to be paid to the Contractor by Owner in the manner and at the time hereinafter provided, and subject to the terms and conditions provided for in the Instructions to Bidders and other Contract Documents (as defined in the project specifications) referenced within the Instructions to Bidders), all of which are incorporated herein by reference, hereby agrees to perform all Work described and reasonably inferred from the Contract Documents. The Contract Price is the amount contemplated by the Base Bid, as indicated in the accepted Bid.

The following documents are incorporated by reference in this Contract and made a part hereof:

- Notice of Contract Opportunity
- Supplemental Instructions to Bidders
- Bid Form
- Prevailing Wage Rates
- Plans, Specifications and Drawings
- Instructions to Bidders
- Bid Bond
- Performance Bond and Payment Bond
- Payroll and Certified Statement Form

[The Plans, Specifications and Drawings expressly incorporated by reference into this Contract includes, but is not limited to, the Special Provisions for Highway Construction Department of Transportation and Development Clackamas County, Oregon Tickle Creek (427th Ave) Culvert Replacement Construction (the "Specifications"), together with the provisions of the Oregon Standard Specifications for Construction (2021) referenced therein.

The Contractor shall comply with the prohibitions set forth in ORS 652.220, compliance of which is a material element of this Contract and failure to comply is a material breach that entitles County to exercise any rights and remedies available under this Contract including, but not limited to, termination for default.

2. Representatives.

Contractor has named Manolo J Low as its Authorized Representative to act on its behalf. Owner designates, or shall designate, its Authorized Representative as indicted below (check one):

☒ Unless otherwise specified in the Contract Documents, the Owner designates Jonathan Hangartner as its Authorized Representative in the administration of this Contract. The above-named individual shall be the initial point of contact for matters related to Contract performance, payment, authorization, and to carry out the responsibilities of the Owner.

☐ Name of Owner's Authorized Representative shall be submitted by Owner in a separate writing.

3. Key Persons.
The Contractor's personnel identified below shall be considered Key Persons and shall not be replaced during the project without the written permission of Owner, which shall not be unreasonably withheld. If the Contractor intends to substitute personnel, a request must be given to Owner at least 30 days prior to the intended time of substitution. When replacements have been approved by Owner, the Contractor shall provide a transition period of at least 10 working days during which the original and replacement personnel shall be working on the project concurrently. Once a replacement for any of these staff members is authorized, further replacement shall not occur without the written permission of Owner. The Contractor's project staff shall consist of the following personnel:

Project Executive: Manolo J Low shall be the Contractor's project executive, and will provide oversight and guidance throughout the project term.

Project Manager: Vern Gardner shall be the Contractor's project manager and will participate in all meetings throughout the project term.

Job Superintendent: Manolo J Low shall be the Contractor's on-site job superintendent throughout the project term.

Project Engineer: Vern Gardner shall be the Contractor's project engineer, providing assistance to the project manager, and subcontractor and supplier coordination throughout the project term.

4. Contract Dates.
COMMENCEMENT DATE: Upon Issuance of Notice to Proceed ("NTP")
SUBSTANTIAL COMPLETION DATE: October 31, 2023
FINAL COMPLETION DATE: December 31, 2024

Time is of the essence for this Contract. It is imperative that the Work in this Contract reach Substantial Completion and Final Completion by the above specified dates.

5. Insurance Certificates and Required Performance and Payment Bonds.

5.1 In accordance with Section 00170.70 of the Specifications, Contractor shall furnish proof of the required insurance naming Clackamas County as an additional insured. Insurance certificates may be returned with the signed Contract or may be emailed to the County Contract Analyst.

5.2 Primary Coverage: Insurance carried by Contractor under the Contract shall be the primary coverage. The coverages indicated are minimums unless otherwise specified in the Contract Documents.

5.2.1 Workers' Compensation: All employers, including Contractor, that employ subject workers who work under the Contract in the State of Oregon shall comply with ORS 656.017 and provide the required Workers' Compensation coverage, unless such employers are exempt under ORS 656.126. This shall include Employer's Liability Insurance with coverage limits of not less than the minimum amount required by statute for each accident. Contractors who perform the Work without the assistance or labor of any employee need not obtain such coverage if the Contractor certifies so in writing. Contractor shall ensure that each of its Subcontractors complies with these requirements. The Contractor shall require proof of such Workers' Compensation coverage by receiving and keeping on file a certificate of insurance from each Subcontractor or anyone else directly employed by either the Contractor or its Subcontractors.

5.3 Builder's Risk Insurance: During the term of the Contract, for new construction the Contractor shall obtain and keep in effect Builder's Risk insurance on an all risk forms, including earthquake and flood, for an amount equal to the full amount of the Contract, plus any changes in values due to modifications, Change Orders and loss of materials added. Such Builder's Risk shall include, in addition to earthquake and flood, theft, vandalism, mischief, collapse, transit, debris removal, and architect's fees "soft costs" associated with delay of Project due to insured peril. Any deductible shall not exceed $50,000 for each loss, except the earthquake and flood deductible which shall not exceed 2 percent of each loss or $50,000, whichever is greater. The deductible shall be paid by Contractor. The policy will include as loss payees Owner, the Contractor and its Subcontractors as their interests may appear.

5.4 Builder's Risk Installation Floater: For Work other than new construction, Contractor shall obtain and keep in effect during the term of the Contract, a Builder's Risk Installation Floater for coverage of the Contractor's labor, materials and equipment to be used for completion of the Work performed under the Contract. The minimum amount of coverage to be carried shall be equal to the full amount of the Contract. The policy will include as loss payees Owner, the Contractor and its Subcontractors as their interests may appear. Owner may waive this requirement at its sole and absolute discretion.

5.4.1 Such insurance shall be maintained until Owner has occupied the facility.

5.4.2 A loss insured under the Builder's Risk insurance shall be adjusted by the Owner and made payable to the Owner as loss payee. The Contractor shall pay Subcontractors their just shares of insurance proceeds received by the Contractor, and by appropriate agreements, written where legally required for validity, shall require Subcontractors to make payments to their Sub-subcontractors in similar manner. The Owner shall have power to adjust and settle a loss with insurers.

5.5 "Tail" Coverage: If any of the required liability insurance is arranged on a "claims made" basis, "tail" coverage will be required at the completion of the Contract for a duration of 36 months or the maximum time period available in the marketplace if less than 36 months. Contractor shall furnish certification of "tail" coverage as described or continuous "claims made" liability coverage for 36 months following Final Completion. Continuous "claims made" coverage will be acceptable in lieu of "tail" coverage, provided its retroactive date is on or before the effective date of the Contract. Owner's receipt of the policy endorsement evidencing such coverage shall be a condition precedent to Owner's obligation to make final payment and to Owner's final acceptance of Work or services and related warranty (if any).

5.6 Notice of Cancellation or Change: If the Contractor receives a non-renewal or cancellation notice from an insurance carrier affording coverage required herein, or receives notice that coverage no longer complies with the insurance requirements herein, Contractor agrees to notify Owner by fax within five (5) business days with a copy of the non-renewal or cancellation notice, or written specifics as to which coverage is no longer in compliance. When notified by Owner, the Contractor agrees to stop Work pursuant to the Contract at Contractor's expense, unless all required insurance remain in effect. Any failure to comply with the reporting provisions of this insurance, except for the potential exhaustion of aggregate limits, shall not affect the coverages provided to the Owner and its institutions, divisions, officers, and employees.
Owner shall have the right, but not the obligation, of prohibiting Contractor from entering the Project Site until a new certificate(s) of insurance is provided to Owner evidencing the replacement coverage. The Contractor agrees that Owner reserves the right to withhold payment to Contractor until evidence of reinstated or replacement coverage is provided to Owner.

5.7 Before execution of the Contract, the Contractor shall file with the Construction Contractors Board, and maintain in full force and effect, the separate public works bond required by Oregon Revised Statutes, Chapter 279C.830 and 279C.836, unless otherwise exempt under those provisions. The Contractor shall also include in every subcontract a provision requiring the Subcontractor to have a public works bond filed with the Construction Contractors Board before starting Work, unless otherwise exempt, and shall verify that the Subcontractor has filed a public works bond before permitting any Subcontractor to start Work.

5.8 When the Contract Price is $50,000 or more, the Contractor shall furnish and maintain in effect at all times during the Contract Period a performance bond in a sum equal to the Contract Price and a separate payment bond also in a sum equal to the Contract Price. Contractor shall furnish such bonds even if the Contract Price is less than the above thresholds if otherwise required by the Contract Documents.

5.9 Bond forms furnished by the Owner and notarized by Contractor's surety company authorized to do business in Oregon are the only acceptable forms of performance and payment security, unless otherwise specified in the Contract Documents.

6. Responsibility for Damages/Indemnity.

6.1 Contractor shall be responsible for all damage to property, injury to persons, and loss, expense, inconvenience, and delay that may be caused by, or result from, the carrying out of the Work to be done under the Contract, or from any act, omission or neglect of the Contractor, its Subcontractors, employees, guests, visitors, invitees and agents.

6.2 To the fullest extent permitted by law, Contractor shall indemnify, defend (with counsel approved by Owner) and hold harmless the Owner and its elected officials, officers, directors, agents, and employees (collectively "Indemnitees") from and against all liabilities, damages, losses, claims, expenses, demands and actions of any nature whatsoever which arise out of, result from or are related to: (a) any damage, injury, loss, expense, inconvenience or delay described in this Section 6.1; (b) any accident or occurrence which happens or is alleged to have happened in or about the Project Site or any place where the Work is being performed, or in the vicinity of either, at any time prior to the time the Work is fully completed in all respects; (c) any failure of the Contractor to observe or perform any duty or obligation under the Contract Documents which is to be observed or performed by the Contractor, or any breach of any agreement, representation or warranty of the Contractor contained in the Contract Documents or in any subcontract; (d) the negligent acts or omissions of the Contractor, a Subcontractor or anyone directly or indirectly employed by them or any one of them or anyone for whose acts they may be liable, regardless of whether or not such claim, damage, loss or expense is caused in part by a party indemnified hereunder (except to the extent otherwise void under ORS 30.140); and (e) any lien filed upon the Project or bond claim in connection with the Work. Such obligation shall not be construed to negate, abridge, or reduce other rights or obligations of indemnity which would otherwise exist as to a party or person described in this Section 6.2.

6.3 In claims against any person or entity indemnified under Section 6.2 by an employee of the Contractor, a Subcontractor, anyone directly or indirectly employed by them or anyone for whose acts they may be liable, the indemnification obligation under Section 6.2 shall not be limited on amount or type of damages, compensation or benefits payable by or for the Contractor or a Subcontractor under workers' compensation acts, disability benefit acts or other employee benefit acts.

7. Tax Compliance.

Contractor must, throughout the duration of this Contract and any extensions, comply with all tax laws of this state and all applicable tax laws of any political subdivision of this state. Any violation of this section shall constitute a material breach of this Contract. Further, any violation of Contractor's warranty in this Contract

that Contractor has complied with the tax laws of this state and the applicable tax laws of any political subdivision of this state also shall constitute a material breach of this Contract. Any violation shall entitle County to terminate this Contract, to pursue and recover any and all damages that arise from the breach and the termination of this Contract, and to pursue any or all of the remedies available under this Contract, at law, or in equity, including but not limited to: (A) Termination of this Contract, in whole or in part; (B) Exercise of the right of setoff, and withholding of amounts otherwise due and owing to Contractor, in an amount equal to County's setoff right, without penalty; and (C) Initiation of an action or proceeding for damages, specific performance, declaratory or injunctive relief. County shall be entitled to recover any and all damages suffered as the result of Contractor's breach of this Contract, including but not limited to direct, indirect, incidental and consequential damages, costs of cure, and costs incurred in securing replacement performance. These remedies are cumulative to the extent the remedies are not inconsistent, and County may pursue any remedy or remedies singly, collectively, successively, or in any order whatsoever.

The Contractor represents and warrants that, for a period of no fewer than six calendar years preceding the effective date of this Contract, has faithfully complied with: (A) All tax laws of this state, including but not limited to ORS 305.620 and ORS chapters 316, 317, and 318; (B) Any tax provisions imposed by a political subdivision of this state that applied to Contractor, to Contractor's property, operations, receipts, or income, or to Contractor's performance of or compensation for any work performed by Contractor; (C) Any tax provisions imposed by a political subdivision of this state that applied to Contractor, or to goods, services, or property, whether tangible or intangible, provided by Contractor; and (D) Any rules, regulations, charter provisions, or ordinances that implemented or enforced any of the foregoing tax laws or provisions.

8. Confidential Information.
Contractor acknowledges that it and its employees or agents may, in the course of performing their responsibilities under this Contract, be exposed to or acquire information that is confidential to Owner. Any and all information of any form obtained by Contractor or its employees or agents in the performance of this Contract shall be deemed confidential information of Owner ("Confidential Information"). Contractor agrees to hold Confidential Information in strict confidence, using at least the same degree of care that Contractor uses in maintaining the confidentiality of its own confidential information, and not to copy, reproduce, sell, assign, license, market, transfer or otherwise dispose of, give, or disclose Confidential Information to third parties or use Confidential Information for any purpose unless specifically authorized in writing under this Contract.

9. Counterparts.
This Contract may be executed in several counterparts, all of which when taken together shall constitute an agreement binding on all Parties, notwithstanding that all Parties are not signatories to the same counterpart. Each copy of the Contract so executed shall constitute an original.

10. Integration.
All provisions of state law required to be part of this Contract, whether listed in the General or Special Conditions or otherwise, are hereby integrated and adopted herein. Contractor acknowledges the obligations thereunder and that failure to comply with such terms is a material breach of this Contract.

The Contract Documents constitute the entire agreement between the parties. There are no other understandings, agreements or representations, oral or written, not specified herein regarding this Contract. Contractor, by the signature below of its authorized representative, hereby acknowledges that it has read this Contract, understands it, and agrees to be bound by its terms and conditions.

11. Liquidated Damages
The Contractor acknowledges that the Owner will sustain damages as a result of the Contractor's failure to substantially complete the Project in accordance with the Contract Documents. These damages may include,

but are not limited to delays in completion, use of the Project, and costs associated with Contract administration and use of temporary facilities. Liquidated damages are further described in the Specifications, and include the following:

11.1 Liquidated Damages shall be as follows if the actual Substantial Completion exceeds the required date of Substantial Completion:

11.1.1. $ 600 per Calendar day past the Substantial Completion date as identified in section 00180.85 (b) and 00180.85 (c).

12. Compliance with Applicable Law. Contractor shall comply with all federal, state, county, and local laws, ordinances, and regulations applicable to the Work to be done under this Contract including, but not limited to, compliance with the prohibitions set forth in ORS 652.220, compliance of which is a material element of this Contract and failure to comply is a material breach that entitles County to exercise any rights and remedies available under this Contract including, but not limited to, termination for default.

13. Responsibility for Taxes. Contractor is solely responsible for payment of any federal, state, or local taxes required as a result of the Contract or the Work including, but not limited, to payment of the corporate activity tax imposed under enrolled HB 3427 (2019 Oregon regular legislative session). Contractor may not include its federal, state, or local tax obligations as part of the cost to perform the Work.

15. No Attorney Fees. In the event any arbitration, action or proceeding, including any bankruptcy proceeding, is instituted to enforce any term of this Contract, each party shall be responsible for its own attorneys' fees and expenses.

Signature page to follow.

In witness whereof, Clackamas County executes this Contract and the Contractor does execute the same as of the day and year first above written.

Contractor DATA:
JQ Construction Incorporated
P.O. Box 250
Beaverton, Oregon 97075

Contractor CCB # 237402 Expiration Date: 8/31/2023
Oregon Business Registry # 1850516-96 Entity Type: DBC State of Formation: Oregon

Payment information will be reported to the IRS under the name and taxpayer ID# provided by the Contractor. Information must be provided prior to contract approval. Information not matching IRS records could subject Contractor to 28 percent backup withholding.

Signature Page Follows

JQ Construction Incorporated

7/11/23

Authorized Signature Date

MANOLO J LOW, President

Name / Title Printed

Clackamas County

Chair Date

Recording Secretary

APPROVED AS TO FORM

07/24/2023

County Counsel Date

CLACKAMAS COUNTY
PUBLIC IMPROVEMENT CONTRACT OPPORTUNITY

Table of Contents

Section B-1…….....Notice of Public Improvement Contract Opportunity

Section B-2……Instructions to Bidders

Section B-3……Supplemental Instructions to Bidders

Section B-4……Bid Bond

Section B-5……Bid Form

Section B-6……Public Improvement Contract

Section B-7……Performance Bond

Section B-8…….. Payment Bond

Section B-9…….. Project Information, Plans, Specifications and Drawings

CLACKAMAS COUNTY
NOTICE OF PUBLIC IMPROVEMENT CONTRACT OPPORTUNITY

INVITATION TO BID #2023-51
Tickle Creek (427th Ave) Culvert Replacement
May 30, 2023

Clackamas County ("County") through its Board of County Commissioners is accepting sealed bids for the **Tickle Creek (427th Ave) Culvert Replacement** Project until **June 21, 2023, 2:00 PM,** Pacific Time, ("Bid Closing") at the following location:

Bidding Documents can be downloaded from the state of Oregon procurement website ("OregonBuys") at the following address: https://oregonbuys.gov/bso/view/login/login.xhtml, Document No.S-C01010-00007075.
Prospective Bidders will need to sign in to download the information and that information will be accumulated for a Plan Holder's List. Prospective Bidders are responsible for obtaining any Addenda from Website listed above.

Submitting Proposals: Bid Locker
Proposals will only be accepted electronically thru a secure online bid submission service, **Bid Locker**.
Email submissions to Clackamas County email addresses will no longer be accepted.

A. Completed proposal documents must arrive electronically via Bid Locker located at https://bidlocker.us/a/clackamascounty/BidLocker.
B. Bid Locker will electronically document the date and time of all submissions. Completed documents must arrive by the deadline indicated in Section 1 or as modified by Addendum. LATE PROPOSALS WILL NOT BE ACCEPTED.
C. Proposers must register and create a profile for their business with Bid Locker in order to submit for this project. It is free to register for Bid Locker.
D. Proposers with further questions concerning Bid Locker may review the Vendor's Guide located at https://www.clackamas.us/how-to-bid-on-county-projects .

Engineers Estimate: $550,000.00

Contact Information
Procurement Process and Technical Questions: Tralee Whitley at TWhitley@clackamas.us

Bids will be opened and publicly read aloud at the above Delivery address after the Bid Closing. Bid results will also be posted to the OregonBuys listing shortly after the opening.

To be eligible for award under this Invitation to Bid, bidders (prime contractors) must submit a prequalification application (either ODOT or County) to the County at least two business days prior to the Bid Closing. County will reject bids from bidders who are not prequalified for the class of work indicated prior to the Bid Closing. **Bidders must be prequalified in Earthwork and Drainage.**

State Prevailing Wage
Prevailing Wage Rates requirements apply to this Project because the maximum compensation for all Owner-contracted Work is more than $50,000. Contractor and all subcontractors shall comply with the provisions of ORS 279C.800 through 279C.870, relative to Prevailing Wage Rates. The Bureau of Labor and Industries (BOLI) wage rates and requirements set forth in the following BOLI booklet (and any

listed amendments to that booklet), which are incorporated herein by reference, apply to the Work authorized under this Agreement:

PREVAILING WAGE RATES for Public Works Contracts in Oregon, April 5, 2023, which can be downloaded at the following web address: http://www.oregon.gov/boli/WHD/PWR/Pages/pwr_state.aspx
The Work will take place in Clackamas County, Oregon.

Clackamas County encourages bids from Minority, Women, and Emerging Small Businesses.

CLACKAMAS COUNTY
PUBLIC IMPROVEMENT CONTRACT

INSTRUCTIONS TO BIDDERS

Clackamas County Local Contract Review Board Rules ("LCRB Rules") govern this procurement process. LCRB Rules may be found at: http://www.clackamas.us/code/documents/appendixc.pdf. The Instructions to Bidders is applicable to the procurement process for Clackamas County, or any component unit thereof identified on the Notice of Public Improvement Contract Opportunity, herein after referred to as the "Owner."

Article 1. Scope of Work

The work contemplated under this contract with the Owner, includes all labor, materials, transportation, equipment and services necessary for, and reasonably incidental to, the completion of all construction work in connection with the project described in the Project Manual which includes, but is not necessarily limited to, the Notice of Public Improvement Contract Opportunity, Instructions to Bidders, Supplemental Instructions to Bidders, Bid Form, Bid Bond, Public Improvement Contract Form, Performance Bond, Payment Bond, and Plans, Specifications and Drawings.

Article 2. Examination of Site and Conditions

Before making a Bid, the Bidder shall examine the site of the work and ascertain all the physical conditions in relation thereto. The Bidder shall also make a careful examination of the Project Manual including the plans, specifications, and drawings and other contract documents, and shall be fully informed as to the quality and quantity of materials and the sources of supply of the materials. Failure to take these steps will not release the successful Bidder from entering into the contract nor excuse the Bidder from performing the work in strict accordance with the terms of the contract at the price established by the Bid.

The Owner will not be responsible for any loss or for any unanticipated costs, which may be suffered by the successful Bidder, as a result of such Bidder's failure to be fully informed in advance with regard to all conditions pertaining to the work and the character of the work required, including site conditions. No statement made by an elected official, officer, agent, or employee of the Owner in relation to the physical or other conditions pertaining to the site of the work will be binding on the Owner, unless covered by the Project Manual or an Addendum.

Article 3. Interpretation of Project Manual and Approval of Materials Equal to Those Provided in the Specifications

If any Bidder contemplating submitting a Bid for the proposed contract is in doubt as to the true meaning of any part of the plans, specifications or forms of contract documents, or detects discrepancies or omissions, such Bidder may submit to the Architect (read "Engineer" throughout in lieu of Architect as appropriate) a written request for an interpretation thereof at least ten (10) calendar days prior to the date set for the Bid Closing.

When a prospective Bidder seeks approval of a particular manufacturer's material, process or item of equal value, utility or merit other than that designated by the Architect in the Project Manual, the Bidder may submit to the Architect a written request for approval of such substitute at least ten (10) calendar days prior to the date set for the Bid Closing. The prospective Bidder submitting the request will be responsible for its prompt delivery.

Requests of approval for a substitution from that specified shall be accompanied by samples, records of performance, certified copies of tests by impartial and recognized laboratories, and such other information as the Architect may request.

To establish a basis of quality, certain processes, types of machinery and equipment or kinds of materials may be specified in the Project Manual either by description of process or by designating a

manufacturer by name and referring to a brand or product designation or by specifying a kind of material. Whenever a process is designated or a manufacturer's name, brand or item designation is given, or whenever a process or material covered by patent is designated or described, it shall be understood that the words "or approved equal" follow such name, designation or description, whether in fact they do so or not.

Any interpretation of the Project Manual or approval of manufacturer's material will be made only by an Addendum duly issued. All Addenda will be posted to the OregonBuys listing and will become a part of the Project Manual. The Owner will not be responsible for any other explanation or interpretation of the Project Manual nor for any other approval of a particular manufacturer's process or item for any Bidder.

When the Architect approves a substitution by Addendum, it is with the understanding that the Contractor guarantees the substituted article or material to be equal or better than the one specified.

Article 4. Security to Be Furnished by Each Bidder

Each Bid must be accompanied by either 1) a cashier's check or a certified check drawn on a bank authorized to do business in the State of Oregon, or 2) a Bid bond described hereinafter, executed in favor of the Owner, for an amount equal to ten percent (10%) of the total amount Bid as a guarantee that, if awarded the contract, the Bidder will execute the contract and provide a performance bond and payment bond as required. The successful Bidder's check or Bid bond will be retained until the Bidder has entered into a contract satisfactory to Owner and furnished a one hundred percent (100%) performance bond and one hundred percent (100%) payment bond. The Owner reserves the right to hold the Bid security as described in Article 10 hereof. Should the successful Bidder fail to execute and deliver the contract as provided for in Article 12 hereof, including a satisfactory performance bond and payment bond within twenty (20) calendar days after the Bid has been accepted by the Owner, then the contract award made to such Bidder may be considered canceled and the Bid security may be forfeited as liquidated damages at the option of the Owner. The date of the acceptance of the Bid and the award of the contract as contemplated by the Project Manual shall mean the date of acceptance specified in the Notice of Intent to Award.

Article 5. Execution of Bid Bond

Should the Bidder elect to utilize a Bid bond as described in Article 4 in order to satisfy the Bid security requirements, such form must be completed in the following manner:

A. Bid bonds must be executed on the County forms, which will be provided to all prospective Bidders by the Owner.

B. The Bid bond shall be executed on behalf of a bonding company licensed to do business in the State of Oregon.

C. In the case of a sole individual, the bond need only be executed as principal by the sole individual. In the case of a partnership, the bond must be executed by at least one of the partners. In the case of a corporation, the bond must be executed by stating the official name of the corporation under which is placed the signature of an officer authorized to sign on behalf of the corporation followed by such person's official capacity, such as president, etc. The corporation seal should then be affixed to the bond.

D. The name of the surety must be stated in the execution over the signature of its duly authorized attorney-in-fact and accompanied by the seal of the surety corporation.

Article 6. Execution of the Bid Form

Each Bid shall be made in accordance with: (i) the sample Bid Form accompanying these instructions; (ii) the appropriate signatures for a sole individual, partnership, corporation or limited liability corporation shall be added as noted in Article 5C above; (iii) numbers pertaining to base Bids shall be stated both in writing and in figures; and (iv) the Bidder's address shall be typed or printed.

The Bid Form relates to Bids on a specific Project

Manual. Only the amounts and information asked for on the Bid Form furnished will be considered as the Bid. Each Bidder shall Bid upon the work exactly as specified and provided in the Bid Form. The Bidder shall include in the Bid a sum to cover the cost of all items contemplated by the Contract. The Bidder shall Bid upon all alternates that may be indicated on the Bid Form. When Bidding on an alternate for which there is no charge, the Bidder shall write the words "No Charge" in the space provided on the Bid Form. If one or more alternates are shown on the Bid Form, the Bidder shall indicate whether each is "add" or "deduct."

Article 7. Prohibition of Alterations to Bid

Bids that are incomplete, or contain ambiguities or have differing conditions required by the Bidder, including requested changes or exceptions to the Public Improvement Contract form or other portions of the Project Manual, may be rejected in Owner's sole and absolute discretion.

Article 8. Submission of Bid

Each Bid shall be sealed in an envelope, properly addressed to the Owner, showing on the outside of the envelope the name of the Bidder and the name of the project. Bids will be received at the time and place stated in the Notice of Public Improvement Contract Opportunity.

Article 9. Bid Closing and Opening of Bids

All Bids must be received by the Owner at the place and time set for the Bid Closing. Any Bids received after the scheduled Bid Closing time for receipt of Bids will be rejected.

At the time of opening and reading of Bids, each Bid received will be publicly opened and read aloud, irrespective of any irregularities or informalities in such Bids.

Generally, Bid results will be posted to the Oregonbuys Website within a couple hours of the opening.

Article 10. Acceptance or Rejection of Bids by Owner

Unless all Bids are rejected, the Owner will award a contract based on the lowest responsive Bid from a responsible Bidder. If that Bidder does not execute the contract, it will be awarded to the next lowest responsible Bidder or Bidders in succession.

The Owner reserves the right to reject all Bids and to waive minor informalities. The procedures for contract awards shall be in compliance with the provisions of the LCRB Rules in effect at that time.

The Owner reserves the right to hold the Bid and Bid security of the three lowest Bidders for a period of thirty (30) calendar days from and after the time of Bid opening pending award of the contract. Following award of the contract the Bid security of the three lowest Bidders may be held twenty (20) calendar days pending execution of the contract. All other Bids will be rejected and Bid security will be returned.

In determining the lowest Bidder, the Owner reserves the right to take into consideration any or all authorized base Bids as well as alternates or combinations indicated in the Bid Form.

If no Bid has been accepted within thirty (30) calendar days after the opening of the Bids, each of the three lowest Bidders may withdraw the Bid submitted and request the return of the Bid security.

Article 11. Withdrawal of Bid

At any time prior to the Bid Closing, a Bidder may withdraw its Bid. This will not preclude the submission of another Bid by such Bidder prior to the time set for the Bid Closing.

After the time set for the Bid Closing, no Bidder will be permitted to withdraw its Bid within the time frames specified in Article 10 for award and execution, except as provided for in that Article.

Article 12. Execution of Contract, Performance Bond and Payment Bond

The Owner will provide the successful Bidder with contract forms within seven (7) calendar days after

the completion of the award protest period. The Bidder is required to execute the contract forms as provided, including a performance bond and a payment bond from a surety company licensed to do surety business in the State of Oregon, within seven (7) calendar days after receipt of the contract forms. The contract forms shall be delivered to the Owner in the number called for and to the location as instructed by the Owner.

Article 13. Recyclable Products

Contractors will use recyclable products to the maximum extent economically feasible in the performance of the Contract.

Article 14. Clarification or Protest of the Solicitation Document or Specifications

Any request for clarification or protest of the solicitation document or specifications must be submitted in the manner provided for in the applicable section of the LCRB Rules to the Procurement Representative referenced in the Notice of Public Improvement Contract Opportunity.

A protest of the Solicitation Document must be received within seven (7) business days of the issuance of the Bid or within three (3) business days of issuance of an addendum.

Requests for clarification may be submitted no less than five (5) business days prior to the Bid Closing Date.

Article 15. Protest of Intent to Award

Owner will name the apparent successful Bidder in a "Notice of Intent to Award" letter. Identification of the apparent successful Bidder is procedural only and creates no right in the named Bidder to the award of the contract. Competing Bidders will be notified by publication of the Notice of Intent to Award on the OregonBuys Website of the selection of the apparent successful Bidder(s) and Bidders shall be given seven (7) calendar days from the date on the "Notice of Intent to Award" letter to review the file at the Procurement Division office and file a written protest of award, pursuant to C-049-0450. Any award protest must be in writing and must be delivered by email, hand delivery, or mail to the Procurement Division Director at: Procurement Division, 2051 Kaen Road, Oregon City, OR 97045.

Article 16. Disclosure of First-Tier Subcontractors

Within two (2) working hours after the Bid Closing, all Bidders shall submit to the County a disclosure form identifying any first-tier subcontractors (those entities that would be contracting directly with the prime contractor) that will be furnishing labor and materials on the contract, if awarded, whose subcontract value would be equal to or greater than: (a) Five percent (5%) of the total contract price, but at least $15,000; or (b) $350,000, regardless of the percentage of the total contract price.

Disclosures may be submitted with the Bid or may be hand delivered to the Bid Closing address or emailed to the Contract Information Analyst listed on the Notice of Contract Opportunity.

CLACKAMAS COUNTY
PUBLIC IMPROVEMENT CONTRACT

SUPPLEMENTAL INSTRUCTIONS TO BIDDERS

Project Name: # 2023-51
Tickle Creek (427th Ave) Culvert Replacement

The following modify the Clackamas County "Instructions to Bidders" for this Project. Where a portion of the Instructions to Bidders has been modified by these Supplemental Instructions to Bidders, the unaltered portions shall remain in effect.

1. To be eligible for award under this Invitation to Bid, bidders (prime contractors) must submit a prequalification application (either ODOT or County) to the County at least two business days prior to the Bid Closing. County will reject bids from bidders who are not prequalified for the class of work indicated prior to the Bid Closing. **Bidders must be prequalified in Earthwork and Drainage.**

1. **Electronic Submissions: The County is requiring all bids for this project be electronically submitted. Complete Bids (including all attachments) will only be accepted electronically thru a secure online bid submission service, Bid Locker. Email submissions to Clackamas County email addresses will no longer be accepted. https://bidlocker.us/a/clackamascounty/BidLocker.**

   Bids will be publicly read aloud via the computer application, Zoom. Bidders will be allowed to video conference or listen by phone to the bid results. The projects Zoom meeting can be accessed via the information below:

   ZOOM LINKS.
   Join Zoom Meeting
   https://clackamascounty.zoom.us/j/81944604988

   Meeting ID: 819 4460 4988
   One tap mobile
   +17193594580,,81944604988# US
   +12532050468,,81944604988# US

   Dial by your location
   +1 719 359 4580 US
   +1 253 205 0468 US
   +1 253 215 8782 US (Tacoma)
   +1 346 248 7799 US (Houston)
   +1 408 638 0968 US (San Jose)
   +1 669 444 9171 US

+1 669 900 6833 US (San Jose)
+1 564 217 2000 US
+1 646 876 9923 US (New York)
+1 646 931 3860 US
+1 689 278 1000 US
+1 301 715 8592 US (Washington DC)
+1 305 224 1968 US
+1 309 205 3325 US
+1 312 626 6799 US (Chicago)
+1 360 209 5623 US
+1 386 347 5053 US
+1 507 473 4847 US
Meeting ID: 819 4460 4988
Find your local number: https://clackamascounty.zoom.us/u/kelrugQfk

**The Apparent Low bid results will be posted to the projects OregonBuys listing as soon as possible following the bid opening.

2. **Good Faith Effort:** Clackamas County encourages participation in contracts by Historically Underrepresented Businesses. "Historically Underrepresented Businesses" are State of Oregon-certified and self-identified minority, women and emerging small business as well as firms that are certified federally or by another state or entity with substantially similar requirements as the State of Oregon.

   Bidders must perform Good Faith Effort (defined below) and submit **Form 1 and Form 2** for the Bidders Bid to be considered responsive. **Form 1 and Form 2** must be submitted within **two (2) hours** after the Closing Date and Time. Form 1 and Form 2 may be submitted to either the Contact Information Analyst listed on Notice of Contract Opportunity or via the https://bidlocker.us/a/clackamascounty/BidLocker listing.
   "Good Faith Effort" is a requirement of a prime contractor to reach out to at least three Historically Underrepresented Business Subcontractors for each division of work that will be subcontracted out and to complete the required forms. If fewer than three Historically Underrepresented Business Subcontractors are reasonably available for a particular division of work, the Bidder must specifically note the reason for there being fewer than three contacts. The outreach should be performed with sufficient time to give the subcontractors at least 5 calendar days to respond to the opportunity. Form 3, which documents the actual amount of subcontractors on the project, must be submitted with the project final pay application. Compliance with the Good Faith Effort and submission of Forms 1, 2 and 3 is a contractual requirement for final payment.

   The sufficiency of the documentation or the performance of Good Faith Effort shall be in the sole and absolute determination of Clackamas County. Only those Bidders that Clackamas County has determined have not sufficiently performed Good Faith Effort shall have protest rights of the determination for such Bidder.

No Bidder shall have protest rights of the sufficiency of any other Bidder completing Good Faith Effort.

CLACKAMAS COUNTY
GOOD FAITH EFFORT
SUBCONTRACTOR AND SELF-PERFORMED WORK LIST
(FORM 1)

Prime Contractor Name:

Total Contract Amount:

Project Name: # 2023-51 Tickle Creek (427th Ave) Culvert Replacement

PRIME SELF-PERFORMING: Identify below **ALL** GFE Divisions of Work (DOW) to be self-performed. Good Faith Efforts are otherwise required.

DOW BIDDER WILL SELF-PERFORM *(GFE not required)*	
EXCAVATION	
Place culvert	
By Pass	

PRIME CONTRACTOR SHALL DISCLOSE AND LIST ALL SUBCONTRACTORS, including those Minority-owned, Woman-owned, and Emerging Small Businesses ("M/W/ESB") that you intend to use on the project. Delivery via bid locker https://bidlocker.us/a/clackamascounty/BidLocker within 2 hours of the BID/Quote Closing Date/Time.

LIST ALL SUBCONTRACTORS BELOW Use **correct legal name** of Subcontractor (No Assumed Business Names)	**Division of Work** (Painting, electrical, landscaping, etc.) List **ALL** DOW performed by Subcontractors	**DOLLAR AMOUNT OF SUBCONTRACT**	If Certified or self-reporting MBE/WBE/ESB Subcontractor Check box ✓		
			MBE	WBE	ESB
Name Cutter CONSTRUCTION **Address** 21N 10 S Levi Rd **City/St/Zip** Beavercreek, OR 97004 **Phone#** 503 969 5116 **OCCB#** 66797	TRUCKING	46,000	☐	☑	☐
Name Kurahashi & Assoc Inc **Address** 4470 SW HALL Blvd Ste C **City/St/Zip** Beaverton, OR 97005 **Phone#** 503 644 - 6842 **OCCB#** N/A	Survey Staking	20,900	☑	☐	☑
Name Andres Landscape **Address** P.O. Box 1131 **City/St/Zip** Oregon City, OR 97045 **Phone#** 503 632 3366 ofc 503 347 7581 Noah **OCCB#** 203183	Landscaping	12,600	☑	☐	☐
Name **Address** **City/St/Zip** **Phone#** **OCCB#**			☐	☐	☐

GFE SUBCONTRACTOR AND SELF-PERFORMED WORK LIST (FORM 1) cont'd

Prime Contractor Name: **Total Contract Amount:**

Project Name: # 2023-51 Tickle Creek (427th Ave) Culvert Replacement

<u>LIST ALL</u> SUBCONTRACTORS BELOW Use **<u>correct legal name</u>** of Subcontractor (No Assumed Business Names)	**Division of Work** (Painting, electrical, landscaping, etc.) List **ALL** DOW performed by Subcontractors	**DOLLAR AMOUNT OF SUBCONTRACT**	If Certified or self-reporting MBE/WBE/ESB Subcontractor Check box ✓		
			MBE	WBE	ESB
Name **Address** **City/St/Zip** **Phone#** **OCCB#**			☐	☐	☐
Name **Address** **City/St/Zip** **Phone#** **OCCB#**			☐	☐	☐
Name **Address** **City/St/Zip** **Phone#** **OCCB#**			☐	☐	☐
Name **Address** **City/St/Zip** **Phone#** **OCCB#**			☐	☐	☐
Name **Address** **City/St/Zip** **Phone#** **OCCB#**			☐	☐	☐
Name **Address** **City/St/Zip** **Phone#** **OCCB#**			☐	☐	☐
Name **Address** **City/St/Zip** **Phone#** **OCCB#**			☐	☐	☐

CLACKAMAS COUNTY
GOOD FAITH EFFORT
M/W/ESB CONTACT / BIDS RECEIVED LOG
(FORM 2)

Prime Contractor:
Project: # 2023-51 Tickle Creek (427th Ave) Culvert Replacement

Prime Contractor must contact or endeavor to contact at least 3 M/W/ESB Subcontractors for each Division of Work. Prime Contractor shall record its contacts with M/W/ESB Subcontractors through use of this log (or equivalent) entering all required information. All columns shall be completed where applicable. Additional forms may be copied if needed.

NAME OF M/W/ESB SUBCONTRACTOR	Divisions of Work (Painting, electrical, landscaping, etc.)	Date Sollicitation Letter / Fax Sent	PHONE CONTACT		BID ACTIVITY Check Yes or No			REJECTED BIDS (if bid received & not used)		Notes
			Date of Call	Person Receiving Call	Will Bid	Bid Received	Bid Used	Bid Amount	Reason Not Used (Price, Scope or Other. If Other, explain in Notes>>)	
CUTTER CONSTRUCTION	TRUCKING	6/10/23	—	—	☑ Yes ☐ No	☑ Yes ☐ No	☑ Yes ☐ No	46000		
KORAHASHI & ASSOC INC	Survey	6/2/23	—	—	☑ Yes ☐ No	☑ Yes ☐ No	☑ Yes ☐ No	20,900		
Andres LANDSCAPE	LANDSCAPING	6/14/23	—	—	☑ Yes ☐ No	☑ Yes ☐ No	☑ Yes ☐ No	12,600		
					☐ Yes ☐ No	☐ Yes ☐ No	☐ Yes ☐ No			
					☐ Yes ☐ No	☐ Yes ☐ No	☐ Yes ☐ No			
					☐ Yes ☐ No	☐ Yes ☐ No	☐ Yes ☐ No			
					☐ Yes ☐ No	☐ Yes ☐ No	☐ Yes ☐ No			

CLACKAMAS COUNTY
PUBLIC IMPROVEMENT CONTRACT

BID BOND

Project Name: # 2023-51 Tickle Creek (427th Ave) Culvert Replacement

We, **JQ Construction Incorporated**, as "Principal,"
(Name of Principal)

and **SureTec Insurance Company**, an **Texas** Corporation,
(Name of Surety)

authorized to transact Surety business in Oregon, as "Surety," hereby jointly and severally bind ourselves, our respective heirs, executors, administrators, successors and assigns to pay unto Clackamas County ("Obligee") the sum of ($ **10%**)

Ten Percent Amount of Bid dollars.

WHEREAS, the condition of the obligation of this bond is that Principal has submitted its proposal or bid to an agency of the Obligee in response to Obligee's procurement document (No.) for the project identified above which proposal or bid is made a part of this bond by reference, and Principal is required to furnish bid security in an amount equal to ten (10%) percent of the total amount of the bid pursuant to the procurement document.

NOW, THEREFORE, if the Obligee shall accept the bid of the Principal and the Principal shall enter into a Contract with the Obligee in accordance with the terms of such bid, and give such bond or bonds as may be specified in the bidding or Contract Documents with good and sufficient surety for the faithful performance of such Contract and for the prompt payment of labor and material furnished in the prosecution thereof, or in the event of the failure of the Principal to enter such Contract and give such bond or bonds, if the Principal shall pay to the Obligee the difference not to exceed the penalty hereof between the amount specified in said bid and such larger amount for which the Obligee may in good faith contract with another party to perform the Work covered by said bid, then this obligation shall be null and void, otherwise to remain in full force and effect.

IN WITNESS WHEREOF, we have caused this instrument to be executed and sealed by our duly authorized legal representatives this **20** day of **June**, 20**23**.

Principal: **JQ Construction Incorporated**

By: _____
Signature MANOLO J LOW

President
Official Capacity

Attest: _____
Corporation Secretary

Surety: **SureTec Insurance Company**

By: Attorney-In-Fact

Gilberto Quintero
Name

8285 SW Nimbus Ave, Suite 120
Address

Beaverton **Oregon** **97008**
City State Zip

(503)639-4220 **(503)639-4449**
Phone Fax

POA# 3710013

JOINT LIMITED POWER OF ATTORNEY

KNOW ALL MEN BY THESE PRESENTS: That SureTec Insurance Company, a Corporation duly organized and existing under the laws of the State of Texas and having its principal office in the County of Harris, Texas and Markel Insurance Company (the "Company"), a corporation duly organized and existing under the laws of the state of Illinois, and having its principal administrative office in Glen Allen, Virginia, does by these presents make, constitute and appoint:

Nathan Nelson Hurst, Richard Zarosinski, Linda Rooke, Teresa Lynn Johnson, Joseph P. Riter, Gilberto Quintero

Their true and lawful agent(s) and attorney(s)-in-fact, each in their separate capacity if more than one is named above, to make, execute, seal and deliver for and on their own behalf, individually as a surety or jointly, as co-sureties, and as their act and deed any and all bonds and other undertaking in suretyship provided, however, that the penal sum of any one such instrument executed hereunder shall not exceed the sum of:

Fifty Million and 00/100 Dollars ($50,000,000.00)

This Power of Attorney is granted and is signed and sealed under and by the authority of the following Resolutions adopted by the Board of Directors of SureTec Insurance Company and Markel Insurance Company:

"RESOLVED, That the President, any Senior Vice President, Vice President, Assistant Vice President, Secretary, Assistant Secretary, Treasurer or Assistant Treasurer and each of them hereby is authorized to execute powers of attorney, and such authority can be executed by use of facsimile signature, which may be attested or acknowledged by any officer or attorney, of the company, qualifying the attorney or attorneys named in the given power of attorney, to execute in behalf of, and acknowledge as the act and deed of the SureTec Insurance Company and Markel Insurance Company, as the case may be, all bond undertakings and contracts of suretyship, and to affix the corporate seal thereto."

IN WITNESS WHEREOF, Markel Insurance Company and SureTec Insurance Company have caused their official seal to be hereunto affixed and these presents to be signed by their duly authorized officers on the 24th day of January, 2023.

SureTec Insurance Company

By: Michael C. Keimig, President

SURETEC INSURANCE COMPANY TEXAS

MARKEL INSURANCE CORPORATE SEAL ILLINOIS

Markel Insurance Company

By: Lindey Jennings, Vice President

State of Texas
County of Harris:

On this 24th day of January, 2023 A. D., before me, a Notary Public of the State of Texas, in and for the County of Harris, duly commissioned and qualified, came THE ABOVE OFFICERS OF THE COMPANIES, to me personally known to be the individuals and officers described in, who executed the preceding instrument, and they acknowledged the execution of same, and being by me duly sworn, disposed and said that they are the officers of the said companies aforesaid, and that the seals affixed to the proceeding instrument are the Corporate Seals of said Companies, and the said Corporate Seals and their signatures as officers were duly affixed and subscribed to the said instrument by the authority and direction of the said companies, and that Resolutions adopted by the Board of Directors of said Companies referred to in the preceding instrument is now in force.

IN TESTIMONY WHEREOF, I have hereunto set my hand, and affixed my Official Seal at the County of Harris, the day and year first above written.

JULIE E. MCCLARY
Notary Public State of Texas
Commission # 12947680-5
Commission Expires March 29, 2026

By: Julie E. McClary, Notary Public
My commission expires 3/29/2026

We, the undersigned Officers of SureTec Insurance Company and Markel Insurance Company do herby certify that the original POWER OF ATTORNEY of which the foregoing is a full, true and correct copy is still in full force and effect and has not been revoked.

IN WITNESS WHEREOF, we have hereunto set our hands, and affixed the Seals of said Companies, on the 20 day of June, 2023.

SureTec Insurance Company

By: M. Brent Beaty, Assistant Secretary

Markel Insurance Company

By: Andrew Marquis, Assistant Secretary

Any Instrument Issued in excess of the penalty stated above is totally void and without any validity. **3710013**
For verification of the authority of this Power you may call (713)812-0800 on any business day between 8:30 AM and 5:00 PM CST.

CLACKAMAS COUNTY
PUBLIC IMPROVEMENT CONTRACT

BID FORM

PROJECT: # 2023-51 Tickle Creek (427th Ave) Culvert Replacement
BID CLOSING: June 21, 2023, 2:00 PM, Pacific Time
BID OPENING: June 21, 2023, 2:05 PM, Pacific Time

FROM: JQ CONSTRUCTION INC
Bidder's Name (must be full legal name, not ABN/DBA)

TO: https://bidlocker.us/a/clackamascounty/BidLocker

1. Bidder is (*check one of the following and insert information requested*):

____a. An individual; or

____b. A partnership registered under the laws of the State of _____; or

X c. A corporation organized under the laws of the State of OREGON; or

____d. A limited liability corporation organized under the laws of the State of _____;

and authorized to do business in the State of Oregon hereby proposes to furnish all material and labor and perform all work hereinafter indicated for the above project in strict accordance with the Contract Documents for the Basic Bid as follows:
Three hundred ninety nine thousand nine hundred seventy & no/100's Dollars ($399,970 00/100)

and the Undersigned agrees to be bound by the following documents:

- Notice of Public Improvement Contract Opportunity
- Instructions to Bidders
- Supplemental Instructions to Bidders
- Bid Bond
- Bid Form
- Public Improvement Contract Form
- Performance Bond and Payment Bond
- Prevailing Wage Rates
- Payroll and Certified Statement Form
- Plans, Specifications and Drawings

- ADDENDA numbered 1 through 2, inclusive *(fill in blanks)*

2. The Undersigned proposes to add to or deduct from the Base Bid indicated above the items of work relating to the following Alternate(s) as designated in the Specifications: **N/A**

3. The Undersigned proposes to add to or deduct from the Base Bid indicated above the items or work relating to the following Unit Price(s) as designated in the Specifications, for which any adjustments in the Contract amount will be made in accordance with the project specifications: **Provide the attached Bid Schedules with Bid.**

4. The work shall be completed within the time stipulated and specified in 00180.50(h) of the Special Provisions for **Highway Construction Tickle Creek (427th Ave) Culvert Replacement Construction.**

5. Accompanying herewith is Bid Security which is equal to ten percent (10%) of the total amount of the Basic Bid, plus the total sum of Alternatives (if any).

6. The Undersigned agrees, if awarded the Contract, to execute and deliver to Clackamas County, within twenty (20) calendar days after receiving the Contract forms, a Contract Form, and a satisfactory Performance Bond and Payment Bond each in an amount equal to one hundred percent (100%) of the Contract sum, using forms provided by the Owner. The surety requested to issue the Performance Bond and Payment Bond will be:

Suretec Insurance Company.
(name of surety company - not insurance agency)

The Undersigned hereby authorizes said surety company to disclose any information to the Owner concerning the Undersigned's ability to supply a Performance Bond and Payment Bond each in the amount of the Contract.

7. The Undersigned further agrees that the Bid Security accompanying the Bid is left in escrow with Clackamas County; that the amount thereof is the measure of liquidated damages which the Owner will sustain by the failure of the Undersigned to execute and deliver the above-named Contract Form, Performance Bond and Payment Bond, each as published, and that if the Undersigned defaults in either executing the Contract Form or providing the Performance Bond and Payment Bond within twenty (20) calendar days after receiving the Contract forms, then the Bid Security shall become the property of the Owner at the Owner's option; but if the Bid is not accepted within thirty (30) calendar days of the time set for the opening of the Bids, or if the Undersigned executes and timely delivers said Contract Form, Performance Bond and Payment Bond, the Bid Security shall be returned.

8. The Undersigned certifies that: (i) This Bid has been arrived at independently and is being submitted without collusion with and without any agreement, understanding, or planned common course of action with any other vendor of materials, supplies, equipment or services described in the invitation to bid designed to limit independent bidding or competition; and (ii) the contents of the Bid have not been communicated by the Undersigned or its employees or agents to any person not an employee or agent of the Undersigned or its surety on any Bond furnished with the Bid and will not be communicated to such person prior to the official opening of the Bid.

9. The undersigned ☒ **HAS,** ☐ **HAS NOT** (*check one*) paid unemployment or income taxes in Oregon within the past 12 months and ☒ **DOES,** ☐ **DOES NOT** (*check one*) a business address in Oregon. The undersigned acknowledges that, if the selected bidder, that the undersigned will have to pay all applicable taxes and register to do business in the State of Oregon before executing the Contract Form.

10. The Undersigned agrees, if awarded a contract, to comply with the provisions of ORS 279C.800 through 279C.870 pertaining to the payment of the prevailing rates of wage.

11. Contractor's CCB registration number is 237402. As a condition to submitting a bid, a Contractor must be registered with the Oregon Construction Contractors Board in accordance with ORS 701.035 to 701.055, and disclose the registration number. Failure to register and disclose the number will make the bid unresponsive and it will be rejected, unless contrary to federal law.

12. The successful Bidder hereby certifies that all subcontractors who will perform construction work as described in ORS 701.005(2) were registered with the Construction Contractors Board in accordance with ORS 701.035 to 701.055 at the time the subcontractor(s) made a bid to work under the contract.

13. The successful Bidder hereby certifies that, in compliance with the Worker's Compensation Law of the State of Oregon, its Worker's Compensation Insurance provider is SAIF,

Policy No. 1000392 03, and that Contractor shall submit Certificates of Insurance as required.

14. Contractor's Key Individuals for this project (supply information as applicable):

Project Executive: MANOLO J LOW, Cell Phone: 503 726 8237
Project Manager: Vern Gardner, Cell Phone: 503 933 6496
Job Superintendent: MANOLO J LOW, Cell Phone: 503 726 8237
Project Engineer: Vern Gardner, Cell Phone: 503 933 6496.

15. The Undersigned certifies that it has not discriminated against minority, women, or emerging small businesses in obtaining any subcontracts for this project.

16. The Undersigned certifies that it has a drug testing program in accordance with ORS 279C.505.

REMINDER: Bidder must submit the below First-Tier Subcontractor Disclosure Form.

By signature below, Contractor agrees to be bound by this Bid.

NAME OF FIRM JQ CONSTRUCTION INC

ADDRESS P.O. Box 250
Beaverton, OR 97075

TELEPHONE NO 503 726 8237

EMAIL jullien.m.quiche@gmail.com

SIGNATURE 1) _____
Sole Individual

or 2) _____
Partner

or 3) _____
Authorized Officer or Employee of Corporation
MANOLO J LOW

***** ***END OF BID*** *****

BID SCHEDULE

Tickle Creek (427th Ave) Culvert Replacement Construction

ITEM	SPEC	DESCRIPTION	UNIT	QTY	UNIT PRICE	TOTAL PRICE
HARASSMENT PREVENTION, MOBILIZATION AND EXTRA WORK AS AUTHORIZED						
1	00180	WORKPLACE HARASSMENT PREVENTION PLAN	LS	1	500-	500.00
2	00196	EXTRA WORK AS AUTHORIZED	LS	1	$25,000.00	$25,000.00
3	00210	MOBILIZATION	LS	1	53,200.00	53,200.00
TEMPORARY FEATURES AND APPURTENANCES						
4	00221	TEMPORARY WORK ZONE TRAFFIC CONTROL, COMPLETE	LS	1	$ 4000-	4,000.00
5	00245	TEMPORARY WATER MANAGEMENT FACILITY AT STATION 2+85	LS	1	$51572-	51572.00
6	00270	TEMPORARY WORK ZONE FENCING INCLUDING POSTS	LF	390	$ 13.718	5350.00
7	00280	EROSION CONTROL	LS	1	5700-	5700.00
8	00280	CHECK DAM, TYPE 2	LF	325	10-	3250.00
9	00280	CONSTRUCTION ENTRANCES, TYPE 1	EACH	2	1350-	2700.00
10	00290	POLLUTION CONTROL PLAN	LS	1	600-	600.00
11	00290	WORK CONTAINMENT PLAN	LS	1	700-	700.00
12	00290	TURBIDITY MONITORING	LS	1	3625-	3625.00
ROADWORK						
13	00305	CONSTRUCTION SURVEY WORK	LS	1	22818-	22818.00
14	00310	REMOVAL OF STRUCTURES AND OBSTRUCTIONS	LS	1	9170-	9170.00
15	00320	CLEARING AND GRUBBING	LS	1	11700-	11700.00
16	00350	SUBGRADE GEOTEXTILE	SY	220	6-	1320.00
17	00390	LOOSE RIPRAP, CLASS 100	TON	65	182-	11830.00
DRAINAGE AND SEWERS						
18	00405	ROCK EXCAVATION	CY	10	400-	4000.00
19	00445	120 INCH CORRUGATED METAL PIPE (AGENCY-FURNISHED PIPE, COUPLERS AND APPURTENANCES)	LF	60	285-	17100.00
BRIDGES						
20	00510	STRUCTURE EXCAVATION	LS	1	41695-	41695.00
21	00510	GRANULAR WALL BACKFILL	LS	1	55730-	55730.00
BASES						
22	00620	COLD PLANE PAVEMENT REMOVAL, 2 INCH DEPTH	SY	130	69-	8970.00
23	00640	AGGREGATE BASE AND SHOULDERS	TON	77	110-	8470.00
WEARING SURFACES						
24	00744	LEVEL 2, 1/2 INCH ACP MIXTURE	TON	50	273-	13650.00
RIGHT-OF-WAY DEVELOPMENT AND CONTROL						
25	01030	NATIVE PLANT SEEDING	AC	0.20	12000-	2400.00
26	01030	MULCHING	AC	0.20	12000-	2400.00
27	01040	WETLAND PLANTS	EACH	55	22-	1210.00
28	01040	TOPSOIL	CY	20	71-	1420.00
29	01040	CONIFER TREES, SEEDLINGS	EACH	22	40	880.00
30	01050	BARB WIRE FENCE	LF	110	50	5500.00
31	01091	STREAMBED ENHANCEMENT	LS	1	9300-	9300.00
32	01091	FISH COBBLE	TON	105	122-	12810.00
33	01091	FISH ROCKS, TYPE 1	EACH	10	140-	1400.00

PROPOSED COST BID SCHEDULE 399,970.00
(Numerically)

PROPOSED COST BID SCHEDULE Three hundred ninety nine thousand nine hundred seventy and no/100's
(Written in Words)

COMPANY NAME J.Q. CONSTRUCTION INC.

AUTHORIZED SIGNATURE [signature]
MANOLO J. LOW

FIRST-TIER SUBCONTRACTOR DISCLOSURE FORM
PROJECT: #2023-51 Tickle Creek (427th Ave) Culvert Replacement

BID OPENING: June 21, 2023, 2:00 PM, Pacific Time

Failure to submit this Form by the disclosure deadline will result in a nonresponsive bid.

INSTRUCTIONS:
This First-Tier Subcontractor Disclosure Form ("Form") must be submitted and received at the location specified in the Notice of Public Improvement Contract Opportunity on the advertised Bid Closing, and within two working hours after the advertised Bid Closing Time.

A. Completed proposal documents must arrive electronically via Bid Locker located at https://bidlocker.us/a/clackamascounty/BidLocker.
B. Bid Locker will electronically document the date and time of all submissions. Completed documents must arrive by the deadline indicated in Section 1 or as modified by Addendum. LATE PROPOSALS WILL NOT BE ACCEPTED.
C. Proposers must register and create a profile for their business with Bid Locker in order to submit for this project. It is free to register for Bid Locker.
D. Proposers with further questions concerning Bid Locker may review the Vendor's Guide located at https://www.clackamas.us/how-to-bid-on-county-projects .

Subcontractor lists may be submitted with the bid in the same envelope or email at the Bid Closing date and time. Subcontractor lists **MUST** be submitted within **two (2) hours** of the Bid Closing date and time.

List below the name of each subcontractor that will be furnishing labor, or labor and materials, for which disclosure is required, the category of work that the subcontractor will be performing, and the dollar value of the subcontract. Enter **"NONE"** if the value of the project bid is less than $100,000 or there are no subcontractors that need to be disclosed. ATTACH ADDITIONAL SHEETS IF NECESSARY.

	SUBCONTRACTOR NAME	DOLLAR VALUE	CATEGORY OF WORK
1.	Cutter Construction	46,000	Trucking
2.	Kurahashi & Assoc Inc	20,900	Survey
3.	Andres Landscaping	12,600	Landscaping
4.			
5.			
6.			

The above listed first-tier subcontractor(s) are providing labor, or labor and material, with a Dollar Value equal to or greater than:

a) 5% of the total Contract Price, but at least $15,000. If the Dollar Value is less than $15,000 do not list the subcontractor above; or
b) $350,000 regardless of the percentage of the total Contract Price.

Firm Name: J.Q Construction Inc

Bidder Signature: [signature] Phone # 503 933 6496

CLACKAMAS COUNTY
PUBLIC IMPROVEMENT CONTRACT

PERFORMANCE BOND

Bond No.: 4460505
Solicitation: #2023-51
Project Name: Tickle Creek (427th Ave) Culvert Replacement

SureTec Insurance Company	(Surety #1)	Bond Amount No. 1:	$ 399,970.00
N/A	(Surety #2)*	Bond Amount No. 2:*	$ 0.00
** If using multiple sureties*		Total Penal Sum of Bond:	$ 399,970.00

We, JQ Construction Incorporated as Principal, and the above identified Surety(ies), authorized to transact surety business in Oregon, as Surety, hereby jointly and severally bind ourselves, our respective heirs, executors, administrators, successors and assigns firmly by these presents to pay unto Clackamas County, the sum of (Total Penal Sum of Bond) Three Hundred and Ninety Nine Thousand, Nine Hundred and Seventy 00/100 Dollars (Provided, that we the Sureties bind ourselves in such sum "jointly and severally" as well as "severally" only for the purpose of allowing a joint action or actions against any or all of us, and for all other purposes each Surety binds itself, jointly and severally with the Principal, for the payment of such sum only as is set forth opposite the name of such Surety); and

WHEREAS, the Principal has entered into a contract with Clackamas County, along with the plans, specifications, terms and conditions of which are contained in the above-referenced Solicitation; and

WHEREAS, the terms and conditions of the contract, together with applicable plans, standard specifications, special provisions, schedule of performance, and schedule of contract prices, are made a part of this Performance Bond by reference, whether or not attached to the contract (all hereafter called "Contract"); and

WHEREAS, the Principal has agreed to perform the Contract in accordance with the terms, conditions, requirements, plans and specifications, and all authorized modifications of the Contract which increase the amount of the work, the amount of the Contract, or constitute an authorized extension of the time for performance, notice of any such modifications hereby being waived by the Surety:

NOW, THEREFORE, THE CONDITION OF THIS BOND IS SUCH that if the Principal herein shall faithfully and truly observe and comply with the terms, conditions and provisions of the Contract, in all respects, and shall well and truly and fully do and perform all matters and things undertaken by Contractor to be performed under the Contract, upon the terms set forth therein, and within the time prescribed therein, or as extended as provided in the Contract, with or without notice to the Sureties, and shall defend, indemnify, and save harmless Clackamas County and its elected officials, officers, employees and agents, against any direct or indirect damages or claim of every kind and description that shall be suffered or claimed to be suffered in connection with or arising out of the performance of the Contract by the Principal or its subcontractors, and shall in

all respects perform said contract according to law, then this obligation is to be void; otherwise, it shall remain in full force and effect for so long as any term of the Contract remains in effect.

Nonpayment of the bond premium will not invalidate this bond nor shall Clackamas County, be obligated for the payment of any premiums.

This bond is given and received under authority of Oregon Revised Statutes Chapter 279C and the Clackamas County Local Contractor Review Board Rules, the provisions of which hereby are incorporated into this bond and made a part hereof.

IN WITNESS WHEREOF, WE HAVE CAUSED THIS INSTRUMENT TO BE EXECUTED AND SEALED BY OUR DULY AUTHORIZED LEGAL REPRESENTATIVES.

Dated this 20 day of July, 20 23.

PRINCIPAL: JQ Construction Incorporated

By: _____
Signature

_____
Official Capacity

Attest: _____
Corporation Secretary

SURETY: SureTec Insurance Company
[Add signatures for each if using multiple bonds]

BY ATTORNEY-IN-FACT:
[Power-of-Attorney must accompany each bond]

Gilberto Quintero
Name

_____
Signature

8285 SW Nimbus Ave., Suite 120
Address

Beaverton	Oregon	97008
City	State	Zip

(503)639-4220	(503)639-4449
Phone	Fax

LOS ANGELES COUNTY
LIBRARY

CLACKAMAS COUNTY
PUBLIC IMPROVEMENT CONTRACT

PAYMENT BOND

Bond No.: 4460505
Solicitation: #2023-51
Project Name: Tickle Creek (427th Ave) Culvert Replacement

SureTec Insurance Company	(Surety #1)	Bond Amount No. 1:	$ 399,970.00
N/A	(Surety #2)*	Bond Amount No. 2:*	$ 0
* *If using multiple sureties*		Total Penal Sum of Bond:	$ 399,970.00

We, JQ Construction Incorporated, as Principal, and the above identified Surety(ies), authorized to transact surety business in Oregon, as Surety, hereby jointly and severally bind ourselves, our respective heirs, executors, administrators, successors and assigns firmly by these presents to pay unto Clackamas County, the sum of (Total Penal Sum of Bond) Three Hundred and Ninety Nine Thousand Nine Hundred and Seventy 00/100 Dollars (Provided, that we the Sureties bind ourselves in such sum "jointly and severally" as well as "severally" only for the purpose of allowing a joint action or actions against any or all of us, and for all other purposes each Surety binds itself, jointly and severally with the Principal, for the payment of such sum only as is set forth opposite the name of such Surety); and

WHEREAS, the Principal has entered into a contract with Clackamas County, along with the plans, specifications, terms and conditions of which are contained in above-referenced Solicitation; and

WHEREAS, the terms and conditions of the contract, together with applicable plans, standard specifications, special provisions, schedule of performance, and schedule of contract prices, are made a part of this Payment Bond by reference, whether or not attached to the contract (all hereafter called "Contract"); and

WHEREAS, the Principal has agreed to perform the Contract in accordance with the terms, conditions, requirements, plans and specifications, and schedule of contract prices which are set forth in the Contract and any attachments, and all authorized modifications of the Contract which increase the amount of the work, or the cost of the Contract, or constitute authorized extensions of time for performance of the Contract, notice of any such modifications hereby being waived by the Surety:

NOW, THEREFORE, THE CONDITION OF THIS BOND IS SUCH that if the Principal shall faithfully and truly observe and comply with the terms, conditions and provisions of the Contract, in all respects, and shall well and truly and fully do and perform all matters and things by it undertaken to be performed under said Contract and any duly authorized modifications that are made, upon the terms set forth therein, and within the time prescribed therein, or as extended therein as provided in the Contract, with or without notice to the Sureties, and shall defend, indemnify, and save harmless Clackamas County and its elected officials, officers, employees and agents, against any claim for direct or indirect damages of every kind and description that shall be suffered or claimed to be suffered in connection with or arising out of the performance of the Contract by the Contractor or its subcontractors, and shall promptly pay all persons supplying labor, materials or both to the Principal or its subcontractors for prosecution of the work provided in the Contract; and shall promptly pay all contributions due the State Industrial Accident Fund and the State Unemployment Compensation Fund from the Principal or its subcontractors in connection with the performance of the Contract; and shall pay over to the Oregon Department of Revenue all sums required to be deducted and retained from the wages of employees of the Principal and its subcontractors pursuant to ORS 316.167, and

shall permit no lien nor claim to be filed or prosecuted against Clackamas County on account of any labor or materials furnished; and shall do all things required of the Principal by the laws of this State, then this obligation shall be void; otherwise, it shall remain in full force and effect for so long as any term of the Contract remains in effect.

Nonpayment of the bond premium will not invalidate this bond nor shall Clackamas County be obligated for the payment of any premiums.

This bond is given and received under authority of Oregon Revised Statutes Chapter 279C and the Clackamas County Local Contractor Review Board Rules, the provisions of which hereby are incorporated into this bond and made a part hereof.

IN WITNESS WHEREOF, WE HAVE CAUSED THIS INSTRUMENT TO BE EXECUTED AND SEALED BY OUR DULY AUTHORIZED LEGAL REPRESENTATIVES:

Dated this 20 day of July, 20 22.

PRINCIPAL: JQ Construction Incorporated

By: _____
Signature

_____
Official Capacity

Attest: _____
Corporation Secretary

SURETY: SureTec Insurance Company
[Add signatures for each if using multiple bonds]

BY ATTORNEY-IN-FACT:
[Power-of-Attorney must accompany each bond]

Gilberto Quintero
Name

Signature

8285 SW Nimbus Ave, Suite 120
Address

Beaverton | Oregon | 97008
City | State | Zip

(503)639-42220 | (503)639-4449
Phone | Fax

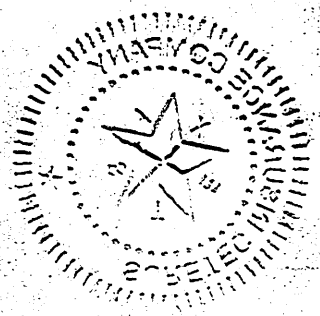

POA# 3710013

JOINT LIMITED POWER OF ATTORNEY

KNOW ALL MEN BY THESE PRESENTS: That SureTec Insurance Company, a Corporation duly organized and existing under the laws of the State of Texas and having its principal office in the County of Harris, Texas and Markel Insurance Company (the "Company"), a corporation duly organized and existing under the laws of the state of Illinois, and having its principal administrative office in Glen Allen, Virginia, does by these presents make, constitute and appoint:

Nathan Nelson Hurst, Richard Zarosinski, Linda Rooke, Teresa Lynn Johnson, Joseph P. Riter, Gilberto Quintero

Their true and lawful agent(s) and attorney(s)-in-fact, each in their separate capacity if more than one is named above, to make, execute, seal and deliver for and on their own behalf, individually as a surety or jointly, as co-sureties, and as their act and deed any and all bonds and other undertaking in suretyship provided, however, that the penal sum of any one such instrument executed hereunder shall not exceed the sum of:

Fifty Million and 00/100 Dollars ($50,000,000.00)

This Power of Attorney is granted and is signed and sealed under and by the authority of the following Resolutions adopted by the Board of Directors of SureTec Insurance Company and Markel Insurance Company:

"RESOLVED, That the President, any Senior Vice President, Vice President, Assistant Vice President, Secretary, Assistant Secretary, Treasurer or Assistant Treasurer and each of them hereby is authorized to execute powers of attorney, and such authority can be executed by use of facsimile signature, which may be attested or acknowledged by any officer or attorney, of the company, qualifying the attorney or attorneys named in the given power of attorney, to execute in behalf of, and acknowledge as the act and deed of the SureTec Insurance Company and Markel Insurance Company, as the case may be, all bond undertakings and contracts of suretyship, and to affix the corporate seal thereto."

IN WITNESS WHEREOF, Markel Insurance Company and SureTec Insurance Company have caused their official seal to be hereunto affixed and these presents to be signed by their duly authorized officers on the 24th day of January, 2023.

SureTec Insurance Company

By: _____
Michael C. Keimig, President

Markel Insurance Company

By: _____
Lindey Jennings, Vice President

State of Texas
County of Harris:

On this 24th day of January, 2023 A. D., before me, a Notary Public of the State of Texas, in and for the County of Harris, duly commissioned and qualified, came THE ABOVE OFFICERS OF THE COMPANIES, to me personally known to be the individuals and officers described in, who executed the preceding instrument, and they acknowledged the execution of same, and being by me duly sworn, disposed and said that they are the officers of the said companies aforesaid, and that the seals affixed to the proceeding instrument are the Corporate Seals of said Companies, and the said Corporate Seals and their signatures as officers were duly affixed and subscribed to the said instrument by the authority and direction of the said companies, and that Resolutions adopted by the Board of Directors of said Companies referred to in the preceding instrument is now in force.

IN TESTIMONY WHEREOF, I have hereunto set my hand, and affixed my Official Seal at the County of Harris, the day and year first above written.

JULIE E. MCCLARY
Notary Public State of Texas
Commission # 12947680-5
Commission Expires March 29, 2026

By: _____
Julie E. McClary, Notary Public
My commission expires 3/29/2026

We, the undersigned Officers of SureTec Insurance Company and Markel Insurance Company do herby certify that the original POWER OF ATTORNEY of which the foregoing is a full, true and correct copy is still in full force and effect and has not been revoked.

IN WITNESS WHEREOF, we have hereunto set our hands, and affixed the Seals of said Companies, on the 20 day of July, 2023.

SureTec Insurance Company

By: _____
M. Brent Beaty, Assistant Secretary

Markel Insurance Company

By: _____
Andrew Marquis, Assistant Secretary

Any Instrument Issued in excess of the penalty stated above is totally void and without any validity. **3710013**
For verification of the authority of this Power you may call (713)812-0800 on any business day between 8:30 AM and 5:00 PM CST.

CLACKAMAS COUNTY
PUBLIC IMPROVEMENT CONTRACT
PROJECT INFORMATION, PLANS, SPECIFICATIONS AND DRAWINGS

PROJECT: #2023-51 Tickle Creek (427th Ave) Culvert Replacement

Project Background:
The existing culvert carrying Tickle Creek underneath 427th Ave failed and needs to be replaced. The county was made aware of the culvert failure in August of 2022 and immediately closed the road. The road will remain closed until the culvert is replaced and the road repaired.

The County designed the project to include a proposed 60 linear feet, 10-ft diameter corrugated metal culvert. The proposed culvert is designed per ODFW's Fish Passage requirements. The project also includes stream restoration and re-planting.

Improvements will also include mobilization, temporary traffic control, construction survey base work, shoulder construction, grading, permanent seeding, and asphalt cement paving.

Engineers Estimate: $550,000.00

Key Dates:
All Basic Bid Work may begin as soon as the Notice to Proceed ("NTP") is issued
Substantial Completion: October 31, 2023
Final Completion: December 31, 2024

Time is of the essence for this Project. Note the Liquidated Damages requirements as described in the project Specifications.

The Scope further includes the following Plans, Specifications and Drawings:

SPECIAL PROVISIONS FOR HIGHWAY CONSTRUCTION- TICKLE CREEK (427TH AVE) CULVERY REPLACEMENT CONSTRUCTION, dated May 2023 (57 pages)

Tickle Creek- 427th Avenue Culvert Replacement, Drawing Set, Sheets No. 1-13 (13 Pages)

SPECIAL PROVISIONS
FOR HIGHWAY CONSTRUCTION

DEPARTMENT OF TRANSPORTATION
AND DEVELOPMENT
CLACKAMAS COUNTY, OREGON

TICKLE CREEK (427TH AVE) CULVERT REPLACEMENT CONSTRUCTION

STRUCTURES, AGGREGATE BASES, ASPHALT CONCRETE PAVING AND OILING, EARTHWORK AND DRAINAGE

May 2023

TABLE OF CONTENTS FOR SPECIAL PROVISIONS

SECTION 00110 – ORGANIZATION, CONVENTIONS, ABBREVIATIONS AND DEFINITIONS 2
SECTION 00120 – BIDDING REQUIREMENTS AND PROCEDURES 6
SECTION 00130 – AWARD AND EXECUTION OF CONTRACT 7
SECTION 00140 – SCOPE OF WORK 9
SECTION 00150 – CONTROL OF WORK 11
SECTION 00165 – QUALITY OF MATERIALS 15
SECTION 00170 – LEGAL RELATIONS AND RESPONSIBILITIES 15
SECTION 00180 – PROSECUTION AND PROGRESS 17
SECTION 00190 – MEASUREMENT OF PAY QUANTITIES 21
SECTION 00195 – PAYMENT 22
SECTION 00196 – PAYMENT FOR EXTRA WORK 24
SECTION 00197 – PAYMENT FOR FORCE ACCOUNT WORK 24
SECTION 00199 – DISAGREEMENTS, PROTESTS AND CLAIMS 24
SECTION 00210 - MOBILIZATION 27
SECTION 00221 – Temporary Work Zone Traffic Control 27
SECTION 00245 - TEMPORARY WATER MANAGEMENT 27
SECTION 00270 - TEMPORARY FENCES 30
SECTION 00280 – EROSION AND SEDIMENT CONTROL 31
SECTION 00290 - ENVIRONMENTAL PROTECTION 33
SECTION 00305 - CONSTRUCTION SURVEY WORK 42
SECTION 00310 - REMOVAL OF STRUCTURES AND OBSTRUCTIONS 42
SECTION 00320 - CLEARING AND GRUBBING 43
SECTION 00330 - EARTHWORK 44
SECTION 00350 - GEOSYNTHETIC INSTALLATION 44
SECTION 00390 - RIPRAP PROTECTION 45
SECTION 00405 - TRENCH EXCAVATION, BEDDING, AND BACKFILL 45
SECTION 00445 - SANITARY, STORM, CULVERT, SIPHON, AND IRRIGATION PIPE 45
SECTION 00510 - STRUCTURE EXCAVATION AND BACKFILL 45
SECTION 00640 - AGGREGATE BASE AND SHOULDERS 46
SECTION 00730 - EMULSIFIED ASPHALT TACK COAT 47
SECTION 00744 - ASPHALT CONCRETE PAVEMENT 47
SECTION 01030 - SEEDING 47
SECTION 01040 - PLANTING 49
SECTION 01050 - FENCES 50
SECTION 01091 - WATERWAY ENHANCEMENTS 50
SECTION 02320 - GEOSYNTHETICS 52

INFORMATION PROVIDED UNDER SEPARATE COVER

- 427th CULVERT REPLACEMENT & CHANNEL RESTORATION PLANS
- BID SCHEDULE

Specifications for Proposed
Tickle Creek (427th Ave) Culvert Replacement
Construction

PROFESSIONAL OF RECORD CERTIFICATION(s):

REGISTERED PROFESSIONAL ENGINEER 18927PE OREGON FEB. 3, 1997 WILLIAM P. NORRIS Expires: 12-31-2024	I certify that the Special Provision Sections listed below were prepared by me or under my supervision. Sections: All Sections.
Date Signed: April 27, 2023	

WORK TO BE DONE

The Plan Sets for this project is entitled:

Tickle Creek - 427th AVENUE CULVERT REPLACEMENT, CLACKAMAS COUNTY

The project consists of the installation of a new culvert structure carrying Tickle Creek on 427th Ave in Clackamas County. Improvements include a replacement of the existing 24” culvert with a 10’ diameter culvert, fencing, creek restoration and any incidental Work, as called for by the Specifications and Plan.

APPLICABLE SPECIFICATIONS

The Specifications that are applicable to the Work on this Project are the 2021 edition of the "Oregon Standard Specifications for Construction", as modified by these Special Provisions. All Sections in Part 00100 apply, whether or not modified or referenced in the Special Provisions.

All number references in these Special Provisions shall be understood to refer to the Sections and subsections of the General Conditions or Standard Specifications bearing like numbers and to Sections and subsections contained in these Special Provisions in their entirety.

The construction drawings may include standard drawings or details within the plan set or they may be included by reference. If standard drawings or details are included, it is intended to indicate that this specific drawing be used. If standard drawings or details are referenced, it is intended to indicate that the latest available drawing should be used.

CLASS OF PROJECT

This is a Clackamas County DTD Funded Project.

SECTION 00110 – ORGANIZATION, CONVENTIONS, ABBREVIATIONS AND DEFINITIONS

Comply with Section 00110 of the Standard Specifications supplemented and/or modified as follows:

00110.05(d) References to Laws, Acts, Regulations, Rules, Ordinances, Statutes, Orders, and Permits

Add the following to the first bullet (Statutes and Rules):

- Clackamas County's Local Contract Review Board (LCRB) Rules are accessible online on the County's website (https://dochub.clackamas.us/documents/drupal/ef976bc9-14f4-495b-9bd8-c69ee7334685).

00110.05(e) Reference to Websites - Add the following bullet list to the end of this subsection:

- American Traffic Safety Services Association (ATSSA)

www.atssa.com

Clackamas County's Local Contract Review Board (LCRB) Rules

https://dochub.clackamas.us/documents/drupal/ef976bc9-14f4-495b-9bd8-c69ee7334685

- ODOT Construction Section

www.oregon.gov/odot/construction/pages/index.aspx

- ODOT Construction Section - Qualified Products List (QPL) www.oregon.gov/ODOT/Construction/Pages/Qualified-Products.aspx

- ODOT Traffic Control Plans Unit

www.oregon.gov/ODOT/Engineering/Pages/Work-Zone.aspx

- ODOT Traffic Standards

www.oregon.gov/ODOT/Engineering/Pages/Signals.aspx

00110.10 Abbreviations

Add the following:

CCDA - Clackamas County Development Agency
DTD - Clackamas County Department of Transportation and Development

LCRB	-	Local Contract Review Board
ODFW	-	Oregon Department of Fish and Wildlife
UNS	-	Utility Notification System
WES	-	Water Environment Services of Clackamas County

00110.20 Definitions

Add or modify definitions as follows:

Agreement Form – The written agreement between the Owner and Contractor covering the work to be performed under the contract.

Amendment – A contract modification for Additional Work, Changed Work, Extra Work, Field Directives, or other changes. An Amendment changes the contract value, scope, and/or time. Amendments require formal approval by the Board of County Commissioners, pursuant to LCRB Rule Division C-049-160, prior to approval of such work.

Approved Equal - Materials or services proposed by the contractor and approved by the County as equal substitutes for those materials or services specified.

Award – Same as “Notice to Intent to Award”.

BCC – The Clackamas County Board of County Commissioners

Bid - A written offer by a bidder on forms furnished by the County to do work stated in the bid documents at the prices quoted. "Bid" is synonymous with "proposal" in these bid documents.

Bid Closing - The date and time for Bid Closing is the same as the date and time for Bid Opening.

Bid Documents - The following documents together comprise the Bid Documents:

- Invitation to Bid, Instructions to Bidders, Bid Form, Bid Proposal, Schedule of Prices, Bid
- Bond, Performance Bond
- Certificate of Insurance, Prevailing Wage Rates
- The "Oregon Standard Specifications for Construction" by ODOT and APWA, 2021 edition.
- Plans and drawings
- Other bid documents included or referenced in the bid documents

- Addenda, if any
- The Agreement Form and Special Provisions

Bonds - The bond or surety bond is a written document given by the surety and principal to the obligee to guarantee a specific obligation.

Change Order - A price agreement for Extra Work, Changed Work, field directives, or other changes. A Change Order does not change the contract value, scope, or time until it is incorporated into an Amendment. Change Orders will be agreed upon, in writing, by the County Project Manager and the Contractor's designated representative.

Contract - The written contract agreement, including amendments, signed by the Contractor and Clackamas County, which describes the work to be done, the contract amount, and defines the relationships and obligations of the Contractor and the County.

Contract Documents - The Invitation to Bid, the Instructions to Bidders, the accepted Bid Proposal and Schedule of Prices, the Subcontractor List, the Bid Bond, the Performance and Payment Bond, the Certificate of Insurance, the Prevailing Wage Rates, the Standard Specifications and Special Provisions, Amendments, the Plans and Drawings, the Agreement, as well as all documents incorporated by reference therein, and any and all addenda prepared by or at the direction of and adopted by the County and further identified by the signature of the parties and all modifications thereof incorporated in the documents before their execution.

County - The term "County" shall mean Clackamas County, including the Board of County Commissioners, employees and agents of the County authorized to administer the conditions of these contract documents.

Department – A subdivision of the Agency.

Engineer - The County's Project Manager either acting directly or through an authorized representative(s). When referring to approval of extra work or other Contract modifications, "Engineer" also refers to the County's legal authority according to the LCRB rules.

Invitation to Bid - The public announcement (Notice to Contractors) inviting bids for work to be performed or materials to be furnished.

Legal Holiday - As defined in ORS 279C.540.

Lump Sum - A method of payment providing for one all-inclusive cost for the work or for a particular portion of the work.

Notice of Intent to Award - A written notice from the County notifying bidders that the County intends to award to the responsible bidder submitting lowest responsive bid.

ODOT Procurement Office – Clackamas County Purchasing Department.

Owner – Synonymous with Agency.

Plan Holder's List – A list of contractor's names, contact names, phone and fax numbers that the County's Purchasing Department creates during bidding of the Project.

Project Manager – The Owner's representative who directly supervises the engineering and administration of the contract.

Shop Drawings – Synonymous with Working Drawings.

Solicitation Document – Synonymous with Bid Documents.

Standard Drawings – The Agency-prepared detailed drawings for Work or methods of construction that normally do not change from project to project. The Standard Drawings include the ODOT Standard Drawings.

Standard Specifications - "Oregon Standard Specifications for Construction", current edition, published by the Oregon Department of Transportation and as amended by **the Agency.**

State - Where the term "State" or "State of Oregon" or "ODOT" appears in the contract documents it shall mean "Clackamas County", "State of Oregon", or "ODOT" as applicable because of context.

Work Day - Any and every calendar day from January 1 to December 31 of every year, excluding Saturdays, Sundays and Legal Holidays.

END OF SECTION

SECTION 00120 – BIDDING REQUIREMENTS AND PROCEDURES

Comply with Section 00120 of the Standard Specifications supplemented and/or modified as follows:

00120.00 Prequalification of Bidders - Delete and replace with the following:

See Instructions to Bidders.

00120.01 General Bidding Requirements – Delete and replace with the following:

See Instructions to Bidders.

00120.05 Request for Plans, Special Provisions, and Bid Booklets: – Delete and replace with the following:

See Notice of Public Improvement Contract and Instructions to Bidders.

Copies of the 2021 Oregon Standard Specifications for Construction and Supplements might be found on the Oregon Department of Transportation website at: http://www.oregon.gov/ODOT/Business/Pages/Standard_Specifications.aspx

00120.15 Examination of Work Site and Solicitation Documents; Consideration of Conditions to be Encountered – Delete the third paragraph.

00120.30 Changes to Plans, Specifications, or Quantities before Opening of Bids - Delete and replace with the following:

See Instructions to Bidders.

00120.40 Preparation of Bids – Delete and replace this section with the following:

See Instructions to Bidders.

00120.45 Submittal of Bids - Delete and replace with:

See Instructions to Bidders.

00120.50 Submitting Bids for More than One Contract – Delete this subsection.

00120.60 Revision or Withdrawal of Bids - Delete and replace with the following:

See Instructions to Bidders.

00120.70 Rejection of Nonresponsive Bids – Delete and replace with the following:

See Instructions to Bidders.

00120.95 Opportunity for Cooperative Arrangement – Delete this section**.**

END OF SECTION

SECTION 00130 – AWARD AND EXECUTION OF CONTRACT

Comply with Section 00130 of the Standard Specifications supplemented and/or modified as follows:

00130.00 Consideration of Bids - Delete third paragraph.

00130.10 Award of Contract - Delete and replace with the following:

See Instructions to Bidders.

00130.15 Right to Protest Award – Delete and replace with the following:

See Instructions to Bidders.

00130.30 Contract Booklet – Add the following:

Other documents are part of the contract documents by reference. These include, but are not limited to:

- The "Oregon Standard Specifications for Construction", 2021 Edition, as published by the Oregon Department of Transportation (ODOT).
- "Oregon Standard Drawings" latest edition, as published by ODOT.
- Clackamas County Service District No. 1 "Surface Water Standard Specifications", latest edition.
- Clackamas County Standard Drawings located at www.clackamas.us/engineering/roadway.html

00130.40 Contract Submittals - Delete and replace with the following:

See Instructions to Bidders.

00130.50(b) By the Agency – Delete and replace with the following:

Within 10 Working Days after the Agency has received and verified the properly executed documents specified in the Instructions to Bidders, and received legal sufficiency approval from the Agency's attorney, the Agency will request Clackamas County Board of Commissioners or County Administrator's Approval of the Contract. Approval will occur within 21 Calendar Days after the Agency has received and verified the properly executed documents. The Agency will then send a fully executed Public Improvement Contract (Contract Form) to the successful Bidder, who then officially becomes the Contractor.

00130.70 Release of Bid Guaranties – Delete and replace with the following:

See Instructions to Bidders.

END OF SECTION

SECTION 00140 – SCOPE OF WORK

Comply with Section 00140 of the Standard Specifications supplemented and/or modified as follows:

00140.30 Agency-Required Changes in the Work – Replace the last paragraph with the following:

Upon receipt of an Engineer's written order modifying the Work, the Contractor shall perform the Work as modified via Change Order, which may be subject to approval as an Amendment.

If an Amendment incorporating changes to the Work increases the Contract amount, the Contractor shall notify its Surety of the increase and shall provide the Agency with a copy of any resulting modification to bond documents. The Contractor's performance of Work pursuant to Amendments shall neither invalidate the Contract nor release the Surety. Payment for changes in the Work shall be made in accordance with 00195.20. Contract Time adjustments shall be made in accordance with 00180.80.

00140.31 "As-Built" Records - Add the following section:

Maintain a current and accurate record of the work completed during the course of this contract. This may be in the form of "as-built" drawings kept by accurately marking a designated set of the contract plans with the specified information as the Work proceeds. Accurate, complete and current "as-built" drawings are a specified requirement for full partial payment of the work completed. At project completion and as a condition of final payment, the Contractor shall deliver to the Project Manager a complete and legible set of "as-built" drawings.

The "as-built" drawings must show the information listed below. Where the term "locate" or "location" is used, it shall mean record of position with respect to both the construction vertical datum and either construction horizontal datum or a nearby permanent improvement.

1) Record location of underground services and utilities as installed.

2) Record location of existing underground utilities and services that are to remain and that are encountered during the course of the work.

3) Record changes in dimension, location, grade or detail to that shown on the plans.

4) Record changes made by change order.

5) Record details not in the original plans.

6) Provide fully completed shop drawings reflecting all revisions.

00140.70(c) Consideration of Proposal - Add the following to the end of this paragraph:

Cost Reduction Proposals will not be considered during the bidding process.

END OF SECTION

SECTION 00150 – CONTROL OF WORK

Comply with Section 00150 of the Standard Specifications modified as follows:

00150.00 Authority of the Engineer – Delete and replace the first sentence with the following:

Except as indicated elsewhere in the Contract (e.g. Amendment approval by the BCC), the Engineer has full authority over the Work and its suspension.

00150.05 Cooperative Arrangements – Delete this section**.**

00150.10 Coordination of Contract Documents

(a) Order of Precedence – Delete this section and replace with the following:

The Engineer will resolve any discrepancies between these documents in the following order of precedence:

- Approved Amendments;
- Approved Change Orders
- Bid Schedule with Schedule of Prices;
- Permits from governmental agencies
- Special Provisions;
- Agency-prepared drawings specifically applicable to the Project and bearing the Project title;
- Reviewed and accepted, stamped Working Drawings;
- Agreement Form;
- Standard Drawings;
- Approved Unstamped Working Drawings;
- Standard Specifications;
- All other Contract Documents not listed above.

Notes on a drawing shall take precedence over drawing details.

Dimensions shown on the drawings, or that can be computed, shall take precedence over scaled dimensions.

00150.15(b) Agency Responsibilities - Replace this subsection, except for the subsection number and title, with the following:

The Engineer will perform the Agency responsibilities described in the ODOT Construction Surveying Manual for Contractors, Chapter 1.5 (see Section 00305).

00150.15(c) Contractor Responsibilities - Replace this subsection, except for the subsection number and title, with the following:

The Contractor shall perform the Contactor responsibilities described in the ODOT Construction Surveying Manual for Contractors, Chapter 1.6 (see Section 00305) and the following:

- Perform earthwork slope staking including intersections and matchlines and set stakes defining limits for clearing which approximate right-of-way and easements.
- Inform the Engineer of any property corners monuments and/or survey markers that are not shown on the plans and are found during construction activities prior to disturbing the monuments. Allow the Agency 2 Work days for referencing all found markers before they are removed. Monuments that are noted on the plans to be protected and are disturbed by the Contractor's activities shall be replaced by the Contractor's surveyor at the Contractor's expense.

00150.50 Cooperation with Utilities: Add the following to the end of Paragraph (a):

There may be other utility servers who are not specifically listed in these Special Provisions or on the Plans that may be adjusting or inspecting their facilities within the project limits.

00150.50(c) Contractor Responsibilities – Add the following to the bulleted list:

- Hold a utility scheduling meeting and monthly utility coordination meetings (see also 00180.42);
- Maintain and re-establish utility location marks according to OAR 952-001-0090(2)(a). Coordinate re-establishment of the location marks with the associated Utility;
- Determine the exact location before excavating within the reasonable accuracy zone according to OAR 952-001-0090(2)(c);
- Backfill any exposed utilities as recommended and approved by the Utility representative. Obtain utility locate warning tape from the Utility and replace damaged or removed warning tape. Utility locate warning tape may not be present at all existing utilities;
- Stake, place warning tape, and maintain no work limits around critical Utility facilities as shown or directed by the Engineer and the Utility; and
- In addition to the notification required in OAR 952-001-0090(5), notify the Engineer and the Utility as soon as the Contractor discovers any previously unknown Utility conflicts or issues. Contrary to the OAR, stop excavating until directed by the Engineer and allow the Utility a minimum of two weeks to relocate or resolve the previously unknown utility issues.

The existing underground utilities shown on the Plans have been determined by as-built records and field surveys, but are not guaranteed to be complete or accurate. The Contractor shall be responsible for contacting the individual utility companies to mark locations, and arranging with them for any relocation work that should be required.

The Contractor shall make excavations and borings ahead of the work where necessary

to determine the exact location of underground pipes or other features, which might interfere with construction. The Contractor shall support and protect pipes or other services where they cross the trench and shall be responsible for all damages incidental in interruptions of service that may be caused by Contractor operations. Where a new utility line crosses an existing pipeline or other conduit, the trench backfill shall be well compacted in a manner that provides for the required backfill and compaction standards while protecting the utility in question.

Energized power lines overhang portions of the Work with a minimum vertical clearance of 18 feet. Contractor shall maintain at least 10 feet of safety clearance. Exceptions require written approval from Portland General Electric and may require an On-Site safety watcher, at no cost to the Contractor. Provide the Engineer a copy of the written approval of exception before beginning work.

00150.70 Detrimental Operations – Add the following:

Portions of this project might be constructed in close proximity to existing private improvements. All private improvements disturbed by the Contractor's operations shall be repaired or replaced to equal or better condition at the Contractor's expense. The Engineer may withhold from future payments to the Contractor, an amount equal to the costs reasonably estimated by the Engineer to repair or replace, as the case may be, those private improvements disturbed by the Contractor's operations. Engineer shall release the retained amount once Engineer has determined that the Contractor has completed the repair consistent with the requirements of this provision. In addition, the Contractor shall include in the video any areas, public or private, that are to be used as staging to document the pre-construction condition of the surface and limits.

END OF SECTION

Section 00160 – Source of Materials

Comply with Section 00160 of the Standard Specifications supplemented and/or modified as follows:

00160.20(a) Buy America – Delete this section and replace with the following: Federal highway funds are NOT involved on this Project.

00160.30 Agency-Furnished Material – Add the following: "The Agency will furnish the listed items at 19009 Barton Park Rd Boring, OR 97009: 120 Inch Corrugated Metal Pipe, including couplers and appurtenances."

END OF SECTION

SECTION 00165 – QUALITY OF MATERIALS

Comply with Section 00165 of the Standard Specifications modified as follows:

00165.04 Costs of Testing – Replace this section with the following sentence: All testing required to be performed by the Contractor will be at the Contractor's expense.

00165.10(a) Field-Tested Materials – Add the following sentence: The County follows the MFTP on its projects:

00165.10(b) Nonfield-Tested Materials - Add the following sentence:

The County follows the NTMAG on its projects.

END OF SECTION

SECTION 00170 – LEGAL RELATIONS AND RESPONSIBILITIES

Comply with Section 00170 of the Standard Specifications supplemented and/or modified as follows:

00170.02 Permits, Licenses, and Taxes – Add the following:

This project is to be constructed in Clackamas County road right of way and streets. There are no separate road opening permits required from Clackamas County to perform the work required under this contract.

00170.03 Furnishing Right-of-Way and Permits – Add the following:

Add the following bullet items:

- The Contactor must comply with all special requirements of the written agreements between the County and the Property Owners for work on Private property within the limits of the Temporary Construction Easements (TCE's) or as established by the right-of-entries signed by the property owners to connect driveways to the new roadway. Copies of these agreements are available at Clackamas County upon request.
- The Contractor shall not store materials or equipment within project TCE's unless specifically approved by the Project Manager.

00170.61(a) Workers' Compensation - In the paragraph, replace "00170.70(d)" with "the Agreement".

Add the following subsection:

00170.67 Fees - The fee required by ORS 279C.825(1) will be paid by the Agency to the Commissioner of the Oregon Bureau of Labor and Industries under the administrative rules of the Commissioner.

00170.70(a) Insurance Coverages - Add the following to the end of this subsection:

The following insurance coverages and dollar amounts are required pursuant to this subsection:

Insurance Coverages	Combined Single Limit per Occurrence	Annual Aggregate Limit
Commercial General Liability	$1,000,000	$4,000,000
Commercial Automobile Liability	$1,000,000	(aggregate limit not required)
Pollution Liability	$1,000,000	$2,000,000
Commercial Automobile Liability With Pollution Coverage	$2,000,000	(aggregate limit not required)

Add the following:

The Contractor shall require that all subcontractors of any tier provide insurance coverage (including additional insured provisions) and limits identical to the insurance required of the Contractor under this contract, unless this requirement is expressly modified or waived by the Agency in writing.

00170.70(c) Additional Insured - Add the following paragraph and bullets to the end of this subsection:

- Clackamas County and its officers, agents, and employees
- Clackamas County Board of Commissioners
  Ecosystem Restoration Services, LLC, dba Parr Excellence and its officers, agents, and employees

00170.72 Indemnity/Hold Harmless – Delete and replace with the following:

Clackamas County Public Improvement Contract.
Extend indemnity and hold harmless to the Agency and the following:

- Clackamas County and its officers, agents, and employees
- Clackamas County Board of Commissioners
- Ecosystem Restoration Services, LLC, dba Parr Excellence and its officers, agents, and employees

END OF SECTION

SECTION 00180 – PROSECUTION AND PROGRESS

Comply with Section 00180 of the Standard Specifications supplemented and/or modified as follows:

00180.06 Assignment of Funds Due Under the Contract - Delete first bulleted item.

00180.21 Subcontracting - Add the following to subsection (a):

All contracts with subcontractors or suppliers shall have provisions making the contract assignable to the County, at the option of the County, if the Contractor terminates, goes out of business, declares bankruptcy, or otherwise is unable to perform provided that the County gives the subcontractor notice of assignment within fourteen (14) days of learning of the inability of the Contractor to perform.

The Engineer may revoke consent to subcontract. If the Engineer revokes consent to subcontract, the subcontractor shall be immediately removed from the Project Site.

00180.40 Limitation of Operations - Add the following to subsection (a):

The Contractor must provide, at a minimum, a 48-hour notice to the Clackamas County Project Manager in order to perform any work on Saturdays.

Some local private property owners will be affected by construction activities on this project and the Contractor is expected to coordinate and work with them to minimize impacts to homes. Access to homes impacted by this project must be maintained at all times. The Contractor shall coordinate with owners regarding all work on their property or impacting their parking and/or access to ensure minimal impact or specific needs during construction are met.

00180.40(b) On-Site Work - Add the following paragraph to the end of the subsection:

The Contractor shall not begin On-Site Work before July 15, 2023, unless approved by th e Engineer.

Add the following subsection:

00180.40(c) Specific Limitations - Limitations of operations specified in these Special Provisions include, but are not limited to, the following:

Limitations	Subsection
Cooperation with Utilities	00150.50
On-Site Work	00180.40(b)
Contract Completion Time	00180.50(h)
In-water Work Restrictions	00290.34(a)

Be aware of and subject to schedule limitations in the Standard Specifications that are not listed in this Subsection.

00180.41 Project Work Schedules – Add the following:

A Type "B" schedule as detailed in the Supplemental Specifications is required on this Contract. In addition, a three-week look ahead schedule shall be prepared by the Contractor on a weekly basis and submitted to the Engineer. It shall include all construction activities planned for the following three-week period. The three-week look ahead schedule can be hand-written and shall be in a format agreed upon by the Contractor and the Engineer.

00180.42 Preconstruction Conference - Add the following:

Before beginning On-Site Work and before meeting with the Engineer for the preconstruction conference, hold a group utilities scheduling meeting with representatives from the utility companies involved with this project. Incorporate the utilities time needs into the Contractor's schedule submitted prior to the preconstruction conference.

Submit the following during the preconstruction conference unless otherwise directed:

- The names, addresses, and telephone numbers of two or more persons employed by the Contractor who can be reached day or night to handle emergency matters.
- Subcontractor's list including contact list for each subcontractor with phone numbers and addresses and work to be performed.
- List of personnel authorized to sign change orders and receive progress payment warrants.
- Video recording of private properties affected by construction per 00150.70.

A representative of each subcontractor shall be required to attend the pre-construction conference.

00180.43 Commencement and Performance of Work - Add the following bullet item:

- Conduct the work at all times in a manner and sequence that will insure minimal interference with traffic. The Contractor shall not begin work that will interfere with work already started. If it is in the County's best interest to do so, the County may require the Contractor to finish a portion or unit of the project on which work is in progress or to finish a construction operation before work is started on an additional portion or unit of the project.

00180.44 Critical Time Periods - Note the following critical time periods where only certain types of work can be performed throughout the project, and completion times for work items:

- All work below Ordinary High Water Elevation: July 15 to September 30, 2023.
- Road closure: July 15 to October 31, 2023.

00180.50(h) Contract Time - There are two Contract Times on this Project as follows:

(1) Complete all Work to be done under the Contract, except for seeding establishment and plant establishment, not later than October 31, 2023.

(2) Complete all Work to be done under the Contract, including seeding and plant establishment, not later than December 31, 2024.

00180.70 Suspension of Work - Add the following to the first bullet item:

If the Inspector has reason to believe that any safety provisions are not being adhered to, the Inspector will immediately notify the Contractor's site foreman and/or the appropriate person and the County Project Manager. The purpose of this discussion is to determine the validity of the alleged violation. This will also allow the Contractor a reasonable amount of time to correct or improve any of the provisions for the safety on this project. If the County Project Manager finds the problem still unresolved or uncorrected, they will notify the Contractor's Project Manager and the County's Risk Management Safety Analyst. If the County's Risk Management Safety Analyst finds that the job site contains any unresolved safety issues they will take appropriate action up to and including suspension of the Contractor's operations on all or part of the Work.

00180.85(b) Liquidated Damages - Add the following paragraph:

The liquidated damages for failure to complete the Work on time required by 00180.50(h) will be $600.00 per Calendar Day *.

* Calendar Day amounts are applicable when the Contract time is expressed on the Calendar Day or fixed date basis.

Add the following subsection:

00180.85(c) Road Closures - Road closures beyond the limits specified will inconvenience the traveling public and will be a cost to the Agency.

The Engineer will determine when it is safe to reopen lanes to traffic. Assessment of liquidated damages will stop when all lanes have been safely reopened. Any liquidated damages assessed under these provisions will be in addition to those listed in 00180.85(b).

Add the following subsection:

00180.88 Workplace Harassment Prevention Plan – Submit a workplace harassment prevention plan for review 10 days before the preconstruction conference. The plan shall ensure all workers are guaranteed a safe and respectful work environment regardless of

their identity or status. The plan applies to, but is not limited to, a worker's race, gender, creed, or any protected characteristic under state or federal law. At a minimum, the plan shall include:

- A Statement that the Contractor shall provide a safe and respectful workplace on the jobsite for all workers, subcontractors, suppliers, and other persons performing work.
- A description of how the plan will be implemented and monitored during the project duration.
- A list of the in-person trainings that will be conducted for workers of all ranks working on the project to support, promote, and grow a positive jobsite culture.
- A list of meaningful policies including procedures for aggrieved workers in need of recourse.
- How incidents involving bullying or harassment will be investigated and resolved in a prompt, thorough, and impartial manner.

Contractor shall post on the jobsite and make available copies of policies about hate, intimidation, or harassment including how to report incidents and how to receive support. Materials will be provided in all languages necessary to be inclusive of the workforce.

00180.89 Measurement – No measurement of quantities will be made for workplace harassment prevention plan.

00180.95 Payment – Payment for workplace harassment prevention plan will be paid for at the Contract lump sum amount for the item "Workplace Harassment Prevention Plan". Payment will be payment in full for developing and implementing the plan during construction of the project, in-person training, developing meaningful policies, and investigating incidents.

END OF SECTION

SECTION 00190 – MEASUREMENT OF PAY QUANTITIES

Comply with Section 00190 of the Standard Specifications supplemented and/or modified as follows:

00190.20(g) Agency-Provided Weigh Technician: Delete and replace subsection (g) with the following:

The Contractor must provide a weigh technician. The Agency will not provide one for the Contractor.

END OF SECTION

SECTION 00195 – PAYMENT

Comply with Section 00195 of the Standard Specifications supplemented and/or modified as follows:

00195.10 Payment for Changes in Material Costs - Delete and replace with the following:

There are no clauses for material price escalation/de-escalation in this project, including for Asphalt, Steel, or Fuel. There is no option for Contractor participation.

00195.20(b) Significant Changed Work – Add the following:

Significant is defined as:

a) An increase or decrease of more than 25 percent of the total cost of the Work calculated from the original proposal quantities and the unit contract prices; or,
b) An increase or decrease of more than 25 percent in the quantity of any one major contract item.

For condition b) above, a major item is defined as any item that amounts to 10 percent or more of the original total contract price.

00195.50 Progress Payments and Retained Amounts - Modify as follows:

00195.50(a) Progress Payments - Modify as follows:

(1) Progress Estimates - Delete the first sentence and replace with the following:

At a regular period each month to be determined at the Preconstruction Conference, the Contractor will make an estimate of the amount and value of pay item work completed and in place. This estimate will be submitted to the Project Manager for review and approval.

(4) Limitations on Value of Work Accomplished - In the first sentence, change "Engineer's estimate" to “Contractor’s reviewed estimate”.

00195.50 (b) Retainage - Delete the first paragraph and replace with:

The amount to be retained from progress payments will be 5.0% of the value of payments made, and will be retained in one of the forms specified in Subsection (c) below. The County will withhold Retainage from all force account and change order work.

00195.50(c) Forms of Retainage – Delete first paragraph and replace with:

Forms of acceptable retainage are set forth below in Subsections (1) through (3). “Cash, Alternate A” or “Cash, Alternate B” (Retainage Surety Bond) are the Agency-preferred forms of retainage. Unless the Contractor notifies the County otherwise in writing, the County will automatically hold retainage per paragraph (2) “Cash, Alternate B (No Interest

Earned). If the Agency incurs additional costs as a result of the Contractor's election to use "Bonds and Securities", the Agency may recover such costs from the Contractor by a reduction of the final payment.

Delete and replace paragraph (2) with the following:

> **(2) Cash, Alternate B (No Interest Earned)** – Retainage will be deducted from progress payments and held by the Agency until final payment is made in accordance with 00195.90, unless otherwise specified in the Contract.

00195.50(d) Release of Retainage – Delete this section and replace with the following:

(d) Release of Retainage - As the Work progresses, release of the amounts to be retained under (b) of this Subsection will only be considered for Pay Items that have been satisfactorily completed. For purposes of this Subsection, a Pay Item will be considered satisfactorily completed only if all of the Work for the Pay Item is complete and all contractual requirements pertaining to the Pay Item and Work have been satisfied. Work not included in a Pay Item, or which constitutes part of an uncompleted Pay Item, will not be regarded as satisfactorily completed Work for the purposes of this Subsection.

When the Work is 50% completed and upon written application of the Contractor and written approval of the Surety, the Engineer or Project Manager may reduce or eliminate retainage on remaining progress payments if the Work is progressing satisfactorily.

A determination of satisfactory completion of Pay Items or Work or release of retainage shall not be construed as acceptance or approval of the Work and shall not relieve the Contractor of responsibility for defective Materials or workmanship or for latent defects and warranty obligations.

END OF SECTION

SECTION 00196 – PAYMENT FOR EXTRA WORK

00196.91 Extra Work Allowance – Add the following new section:

The bid schedule of prices contains the bid item "Extra Work as Authorized". This bid item serves as a contingency for a pre-determined amount of Engineer-ordered Extra Work. All bidders shall reflect this same amount in their total bid. No bidder shall presume in the preparation of the bid or in the course of contract work that there will be a certain payment under that item or a certain order for Extra Work.

The contractor must receive written approval from the Engineer or County Project Manager prior to start of any work to be paid as Extra Work. Any work completed prior to receipt of written approval may not be eligible for compensation.

END OF SECTION

SECTION 00197 – PAYMENT FOR FORCE ACCOUNT WORK

Comply with Section 00197 of the Standard Specifications.

END OF SECTION

SECTION 00199 – DISAGREEMENTS, PROTESTS AND CLAIMS

Comply with Section 00199 of the Standard Specifications supplemented and/or modified as follows:

00199.40 Claim Decision; Review; Exhaustion of Administrative Remedies - Delete the entire section and replace with the following:

The Contractor must properly submit a claim as detailed in 00199.30.

(a) Engineer Claim Review - The Engineer or Project Manager will, as soon as practicable, consider and investigate a Contractor's properly submitted claim for additional compensation, Contract Time, or for a combination of additional compensation and Contract Time. Once the Engineer or Project Manager determines the Agency is in receipt of a properly submitted claim, the Engineer or Project Manager will arrange a meeting, within 28 Calendar Days, or as otherwise agreed by the parties, with the Contractor in order to present the claim for formal review and discussion. A person authorized by the Contractor to execute Change Orders on behalf of the Contractor must be present and attend all claim meetings.

If the Engineer or Project Manager determines that the Contractor must furnish additional information, records, or documentation to allow proper evaluation of the

claim, the Engineer will schedule a second meeting, to be held within 14 calendar days, or as otherwise agreed by the parties, at which the Contractor shall present the requested information, records and documentation.

The Engineer or Project Manager will advise the Contractor of the decision to accept or reject the claim. If the Engineer or Project Manager finds the claim has merit, an equitable adjustment will be offered. If the Engineer or Project Manager finds the claim has no merit, no offer of adjustment will be made and the claim will be denied. The County intends to resolve claims at the lowest possible level.

If, at any step in the claim decision or review process, the Contractor fails to promptly submit requested information or documentation that the Agency deems necessary to analyze the claim, the Contractor is deemed to have waived its right to further review, and the claim will not be considered properly filed and preserved.

If the Engineer or Project Manager has denied a claim, in full or in part, for Contract Time only according to 00180.80, or has denied a claim, in full or in part, for correction of final compensation according to 00195.95, those disputed claims may then be resolved, in full or in part, at either of the two progressive steps of claim review procedure as specified in this Subsection. For all claims, all of the actions and review under each step of the review process shall occur before the review can be advanced to the next higher step.

(b) Director Claim Review - Upon request by the Contractor, the Department Director will review the Engineer or Project Manager's decision on the claim and advise the Contractor of the decision in writing. If the Director finds the claim has merit, and equitable adjustment will be offered. If the Director finds the claim has no merit, no offer of adjustment will be made and the claim will be denied.
Once the Engineer determines the Agency is in receipt of a properly submitted claim, the Engineer will arrange a meeting, within 21 Calendar Days or as otherwise agreed by the parties, with the Contractor in order to present the claim for formal review and discussion.

If the Engineer determines that the Contractor must furnish additional information, records or documentation to allow proper evaluation of the claim, the Engineer will schedule a second meeting, to be held within 14 Calendar Days or as otherwise agreed by the parties, at which the Contractor shall present the requested information, records and documentation.

The Director shall evaluate the claim based on the information provided by the Contractor to the Engineer or Project Manager. However, if the Department Director (or designee) determines that the Contractor must furnish additional information, records or documentation to allow proper evaluation of the claim, the Department Director (or designee) will schedule a meeting, to be held within 14 Calendar Days, or as otherwise agreed by the parties, at which the Contractor shall present the requested information, records and documentation.

The claim is subject to records review, if not all of the records requested by the Department Director (or designee) were furnished. If applicable, advancement of the claim is subject to the provisions regarding waiver and dismissal of the claim or portions of the claim.

The decision of the Department Director shall be the final decision of the Agency.

(c) Commencement of Litigation - If the Contractor does not accept the Director's decision, then the Contractor shall commence any suit or action to collect or enforce any claim filed in accordance with 00199.30 within a period of one (1) year following the mailing of the decision or within one (1) year following the date of "Second Notification", whichever is later. If said suit or action is not commenced in said one (1) year period, the Contractor expressly waives any **and** all claims for additional compensation and any and all causes of suit or action for the enforcement thereof that he might have had.

The Contractor must follow each step in order, and exhaust all available administrative remedies before resorting to litigation. Litigation of a claim that cannot be resolved through the process described above shall be initiated by filing a complaint in the Clackamas County Circuit Court for the State of Oregon.

In any litigation, the entire text of any order or permit issued by the County or any other governmental or regulatory authority, as well as any documents referenced or incorporated therein by reference, shall be admissible for purposes of Contract interpretation.

The Contract shall not be construed against either party regardless of which party drafted it. Other than as modified by the Contract, the applicable rules of contract construction and evidence shall apply. This Contract shall be governed by and construed according to the laws of the State of Oregon without regard to principles of conflict of laws.

The Contractor shall comply with 00170.00.

00199.50 Mediation - Delete the entire section.

00199.60 Review of Determination Regarding Records - Delete the entire section.

END OF SECTION

SECTION 00210 - MOBILIZATION

Comply with Section 00210 of the Standard Specifications.

SECTION 00221 – TEMPORARY WORK ZONE TRAFFIC CONTROL

Comply with Section 00221 of the Standard Specifications.

SECTION 00245 - TEMPORARY WATER MANAGEMENT

Section 00245, which is not a Standard Specification, is included in this Project by Special Provision.

DESCRIPTION

00245.00 Scope - This Work consists of furnishing, installing, operating, maintaining, and removing temporary water management facilities in regulated Work areas.

00245.01 Abbreviations:

TWM - Temporary Water Management
TWMF - Temporary Water Management Facility
TWMP - Temporary Water Management Plan

00245.02 Definitions:

Temporary Water Management Facility - A TWMF that conveys water around or through Work areas, removes water from Work areas, and treats and discharges water at locations outside Work areas.

00245.03 Temporary Water Management Plan - The Agency TWMP is a concept plan. 14 Calendar Days before beginning Work in regulated Work areas, submit stamped Working Drawings of a Contractor-developed TWMP, according to 00150.35, based on either the Agency's concept plan or an independent plan that meets water quality and environmental guideline requirements and does not negatively affect neighboring properties or water rights.

Include the following minimum information in the TWMP:

- The sequence and schedule for dewatering and re-watering. This sequence and schedule must include when to contact the Engineer prior to dewatering and re-watering.
- How the Work area is isolated from the active stream flow upstream, through, and downstream. The contractor is advised that there is the potential for subsurface flow beneath cofferdams. Cofferdams extending into the streambed and banks, and sumps will help minimize subsurface flow past cofferdams.

- How the stream flow is routed and conveyed around or through the isolated Work area.
- How the isolated Work area is de-watered.
- How the pumped water is treated, if necessary, before it is discharged downstream.
- Description of all construction stages, including appropriate contact points for each stage.
- A list of on-site backup Materials and Equipment.
- Provide the name of the TWM Subcontractor (if applicable) and Contractor's superintendent, and their 24-hour contact phone number 10 Days before the pre-Work meeting. If changes in the appointment of the TWM Subcontractor or Contractor's superintendent occur during the term of the Contract, provide written notice to the Engineer within 5 Calendar Days of the change.
- Calculations of water withdraw pump's capacity.
- Details of the proposed water intake screen used to isolate in-water Work area and how it meets the requirements of 00290.34(c)(3).

Any change to the TWMP during construction requires approval prior to implementation.

Obtain the Engineer's written approval before beginning Work in in-water Work areas.

00245.04 Pre-Work Meeting - Before beginning any TWM Work, attend a pre-work meeting at the Project Site with the Engineer no more than 8 Calendar Days prior to implementation of TWM. Pacific Habitat Services will secure required permits for fish salvage and perform fish salvage work. Required meeting attendees include:

- Engineer
- Agency
- Contractor
- Pacific Habitat Services staff
- TWM Subcontractor (if applicable)
- Agency Environmental Coordinator or their appointed representative

The pre-Work meeting agenda typically includes the method of TWM, the TWMP, fish salvage plan and strategy, describe environmental risks, turbidity monitoring, energy dissipation, dewatering and re-watering plan and strategy, site clean-up expectations, and the circumstances under which contacting the Engineer is required.

MATERIALS

00245.10 Materials - Furnish Materials meeting the following requirements:

Pipe.....00445.11
Plastic Sheeting .....00280.14(a)
Riprap 00390.11
Sandbags.....00280.15(a)

Water Intake Screening.....00290.34(c)
Steel Plates……02530
Straw Wattles……..00380.15(a)

Furnish pumps that are:

- Self-priming.
- Equipped with a variable speed governor.
- Equipped with a power source.
- Able to pump water that contains soft and hard solid.

CONSTRUCTION

00245.40 Fish Removal - Qualified Agency, ODFW, or ODOT consultant biologists will remove fish and other aquatic organisms from the isolation Work areas. Coordinate fish removal with Agency and Pacific Habitat Services at least 14 Calendar Days before beginning Work in regulated Work areas. Allow access into the isolation Work areas before, during and after installation of the TWMF to perform the specified tasks as follows:

- **Before Installation of TWMF** - Before any in-water Work, including installing TWMF, qualified personnel will remove fish and other native aquatic organisms from within the proposed isolated Work area.

- **After Installation of TWMF** - After installing TWMF and the reduction of the water level through the isolated Work area has begun, qualified personnel will remove all fish and aquatic organisms as the water level is reduced. Do not completely de-water the isolation area until all fish and aquatic organisms have been removed.

00245.41 Installation - During installation of the temporary water management facility, maintain a downstream water flow rate of at least 50 percent of the upstream water flow rate.

00245.42 Operation - Operate temporary water management as follows:

- Protect fish and fish habitat according to 00290.34.
- Maintain and control water flow downstream of the isolated Work area for the duration of the diversion to prevent downstream de-watering.
- Clean, maintain and repair water intake screening to ensure adequate flows and protection of aquatic organisms.
- In the event of containment failure immediately notify the Agency so arrangements can be made to remove fish and aquatic organisms from the isolation Work areas prior to the continuation of Work within the ordinary high water limits.
- When using a pump for bypassing water during temporary water management, physically monitor the pump in-person and maintain the pump at all times including non-work hours. Provide a back-up pump on-site and ready for use as necessary. Provide the Engineer with a daily report documenting monitoring activities.

MAINTENANCE

00245.60 Maintenance - Monitor water turbidity according to 00290.30(a)(8).

FINISHING AND CLEANING UP

00245.70 Removal - Prior to removal of the TWMF, obtain approval from the Engineer after completion of all Work within ordinary high water limits. Remove the TWMF and re-water and restore the stream flow. Maintain downstream water flow during removal of the facility. Staged or metered re-watering may be required and will be determined by the Engineer.

MEASUREMENT

00245.80 Measurement - No measurement of quantities will be made for temporary water management facilities.

The estimated quantities of Materials required for the temporary water management facility are:

Temporary Water Management Facility at Station 2+85

Pipe.....220 Feet
Plastic Sheeting .....90 Square Yard
Sandbags.....150 Each

Steel plates are an alternative that will minimize subsurface flow if driven into the streambed.

Turbidity monitoring will be measured according to 00290.80.

PAYMENT

00245.90 Payment - The accepted quantities of temporary water management facilities will be paid for at the Contract lump sum amount for the item "Temporary Water Management Facility at Station 2+85".

Payment will be payment in full for furnishing and placing all Materials, and for furnishing all Equipment, labor, and Incidentals necessary to complete the Work as specified.

Turbidity monitoring will be paid for according to 00290.90.

No separate or additional payment will be made for TWMP, maintaining, operating, monitoring, moving, or removing the facility.

SECTION 00270 - TEMPORARY FENCES

Comply with Section 00270 of the Standard Specifications modified as follows:

00270.10 Materials - Add the following sentence;

Provide Temporary Work Zone Fencing Including Posts meeting the requirements of QPL 00221.13, SAT-T-SNO "Tenax" or equal…. i.e."orange construction fencing" and T-Post's.

00270.90 Payment - Add the following pay item:

Pay Item	**Unit of Measurement**
(d) Temporary Work Zone Fencing Including Posts …….	Foot

SECTION 00280 – EROSION AND SEDIMENT CONTROL

Comply with Section 00280 of the Standard Specifications modified as follows:

00280.00 Scope - Replace the paragraph that begins "This Work also consists of providing temporary …" with the following paragraph:

This Work also consists of providing temporary erosion and sediment control (ESC) measures and furnishing, installing, moving, operating, maintaining, inspecting, and removing ESC throughout the Project area according to the Standard Drawings, the erosion and sediment control plan (ESCP) with an environmental management plan (EMP), when required for the Project, the Specifications, or as directed, until the site is permanently stabilized. Included also is the monitoring of weather, of stormwater and receiving waters, the reporting of monitoring observations, the reporting of corrective actions (when necessary) and the updates and revisions of the ESCP, including ESCP cover sheet, necessary to keep it representative of current site conditions and compliant with the 1200-CA Permit.

00280.02 Definitions - Replace the sentence that begins "**Temporary Stabilization"** with the following sentence:

Temporary Stabilization - Measures or methods necessary to prevent erosion until permanent stabilization measures are in place and established.

00280.04 Erosion and Sediment Control Plan on Agency Controlled Lands - Replace the bullets with the following bullets:

- When using the Agency's ESCP with only modifications required to keep the ESCP current during construction, submit a written notification indicating the Agency's ESCP is used without modifications prior to construction.
  - Prior to beginning construction, edit the ESCP to provide a list of all contractors working on the site.
  - Prior to beginning construction edit the ESCP cover sheet to list all personnel by name and position who are responsible for the installation and maintenance of stormwater control measures including their individual responsibilities and certifications. Keep list current for the duration of the project.
- When using a Contractor modified version of the Agency's ESCP, include the following:

    - Proposed ESCP showing all ESC Work, and quantities of Work.
    - An EMP that addresses pollution prevention and control of potentially contaminated sites or Materials.
    - Implementation schedules for the ESCP
    - Plans for each phase of Contractor's Work
    - Names and positions of all personnel engaged in construction activities.
    - Names and positions of all personnel responsible for the installation and maintenance of stormwater control measures.
    - Information required under 1200-CA permit.
- When using a Contractor developed ESCP, develop and stamp the ESCP by a professional with one of the following credentials. Include their name and credentials in the ESCP. The ESCP preparer shall be one of the following:
    - Oregon Registered Professional Engineer,
    - Oregon Registered Landscape Architect; or
    - Oregon Certified Engineering Geologist
- When using a Contractor developed ESCP where engineered facilities such as sedimentation basins or diversion structures for erosion and sediment control are required, prepare and stamp the ESCP by one of the following:
    - Oregon Registered Professional Engineer; or
    - Oregon Registered Landscape Architect.
- When using a Contractor developed ESCP, provide plans for each phase of Contractor's work implementation schedule and information required under the 1200-CA permit and as directed in ODOT's Erosion Control Manual.

00280.41(e) Buffers - Retain and preserve buffer zones of natural, undisturbed vegetation, 50 feet in width between Work and Waters of the State. Where 50 foot buffers are not attainable, provide erosion, runoff and sediment control BMPs with effectiveness equivalent to a 50 foot buffer. Identify and mark buffer zones with flagging, construction fencing or other readily identifiable means.

00280.46(a) Construction Entrances - Add the following to the end of this subsection:

Construct the construction entrances as shown or directed. Contractor to sweep asphalt as necessary to avoid tracking soils offsite.

00280.46(i) Concrete Washout - Add the following paragraph to the end of this subsection:

Locate concrete wash basins and concrete waste disposal to prevent stormwater that has been in contact with concrete wash or waste concrete from contaminating Waters of the State or stormwater inlets or conveyances. Handle wash water as waste. Do not dispose of concrete wash water or wash out concrete trucks or tools onto the ground, or into storm drains, open ditches, streets, or streams.

00280.62(a) Inspection and Monitoring - Replace this subsection, except for the subsection number and title, with the following:

Perform site inspection, complete all applicable parts of the ODOT Erosion Control Monitoring Form, and submit the form to the Agency as follows:

- On initial day of construction activity
- Every 7 days
- 24 hours after any rainfall event or snow melt event that results in runoff, including weekends and holidays
- When directed by the Engineer.

00280.91 Payment – Replace the paragraph that begins "(a) Check Dam, Type..." with the following paragraph:

(a) Check Dam, Type 2.....Foot

SECTION 00290 - ENVIRONMENTAL PROTECTION

Comply with Section 00290 of the Standard Specifications modified as follows:

00290.20(c)(3) Woody Matter – Replace this subsection, except for the subsection number and title, with the following:

The contractor shall deliver cut timber as directed by the property owner at 21819 SE 427th Ave up to 500 linear feet from the existing tree locations. Cut timber shall be placed outside the public right of way, outside of wetland limits, and outside of the ordinary high water limits.

00290.30(a)(6) Other Spill Prevention and Response Measures – Replace the 4th bullet with the following:

- Maintain hazardous material containment kits and spill containment kits on-site to facilitate the cleanup of hazardous material spills on dry land and/or waters of the State and U.S. Spill prevention containment materials shall be maintained and be readily accessible at vehicle staging areas. The amount of spill response materials (such as straw matting/bales, geotextiles, booms, diapers, and other absorbent materials, shovels, brooms, and containment bags) maintained on-site shall be appropriate for the size of the authorized activity.

Add the following subsection:

00290.30(a)(7) Water Quality:

- Do not discharge contaminated or sediment-laden water, including drilling fluids and waste, or water contained within a work area isolation, directly into any waters of the State or U.S. until it has been satisfactorily treated (using a best management practice such as a filter, settlement pond, bio-bag, dirt-bag, or pumping to a vegetated upland location).
- Do not use permanent stormwater quality treatment facilities to treat construction runoff unless prescribed by an ESCP approved under Section 00280.
- If construction discharge water is released using an outfall or diffuser port, do not exceed velocities more than 4 feet per second, and do not exceed an aperture size of 1 inch.
- Do not use explosives under water.
- Implement containment measures adequate to prevent pollutants or construction and demolition materials, such as waste spoils, fuel or petroleum products, concrete cure water, silt, welding slag and grindings, concrete saw cutting by-products and sandblasting abrasives, from entering waters of the State or U.S.
- Implement containment measures adequate to prevent flowing stream water from coming into contact with concrete or grout within the first 24 hours after placement.
- Do not end-dump riprap into the waters of the State or U.S. Place riprap from above the ordinary high water line.
- Cease Project operations under high flow conditions that may result in inundation of the Project area, except for efforts to avoid or minimize resource damage.
- The Engineer retains the authority to temporarily halt or modify the Work in case of excessive turbidity or damage to natural resources.
- If Work activities violate permit conditions or any requirement of this subsection, stop all in-water work activities and notify the Engineer.

00290.30(a)(8) Meter Turbidity Monitoring - In addition to any turbidity monitoring required by 00280.62(c) to comply with NPDES 1200 series requirements, monitor turbidity using a turbidity meter every two hours during in-water work according to the following:

- Use a turbidity meter that has been maintained and calibrated according to the manufacturer's specifications.
- Measure stream turbidity before beginning each day's in-water work to establish pre-construction turbidity levels.
- Measure upcurrent and downcurrent turbidity at two-hour intervals during in-water work and perform work based on turbidity measurements according to the following:
  - Take upcurrent samples at a location representative of background turbidity approximately 100 feet from the in-water work area.
  - Take downcurrent samples at a location approximately 100 feet from the in-water work area at approximately mid-depth of the water body and within any visible turbidity plume.
  - If the downcurrent reading is less than 5 nephelometric turbidity units (NTU) higher than the upcurrent reading, continue to work and take readings every two hours.

- If the downcurrent reading is greater than or equal to 5 and less than 30 NTU higher than the upcurrent reading, modify work procedures and repair or implement best management practices (BMP), continue work, and continue to take readings every two hours. If after four hours the downcurrent reading is still greater than or equal to 5 NTU higher than the upcurrent reading, stop all in-water work and repair or implement additional BMP. Resume in-water work activities only after the downcurrent reading is less than 5 NTU above the upcurrent reading.
- If the downcurrent reading is greater than or equal to 30 and less than 50 NTU higher than the upcurrent reading, modify work procedures, repair or implement BMP and continue work. If, at the subsequent two-hour reading, the downcurrent reading is still more than 30 NTU higher than the upcurrent reading, stop all in-water work and repair or implement additional BMP. Resume in-water work activities only after the downcurrent reading is less than 5 NTU above the upcurrent NTU reading.
- If the downcurrent reading is 50 NTU or more higher than the upcurrent reading, stop all in-water work, repair or implement additional BMP, and inform the Project Manager. Resume in-water work activities only after the downcurrent reading is less than 5 NTU above the upcurrent NTU, as determined by continued readings made at least every two hours, or the next day's initial turbidity reading.
- Document all turbidity monitoring observations on form 734-2755, “Turbidity Monitoring Report”, or another form approved by the Agency. Submit reports to the Project Manager weekly during in-water work and keep copies of the reports at the Project Site.

00290.30(b) Pollution Control Plan - Add the following to the end of this subsection:

Comply with the following, and, as applicable, with OAR 731-005-0800 for contracts subject to OAR chapter 731, division 5 or 7 or with OAR 731-149-0020 for contracts subject to OAR chapter 731, division 149.

Prior to beginning On-Site Work, submit a listing of proposed non-road diesel equipment and on-road trucks to the Engineer as required in (1) and (2) below that demonstrates how compliance with OAR 731-005-800 or OAR 731-149-0020 will be achieved. Update the listing of non-road diesel equipment and on-road trucks specified in (1) and (2) below when additional pieces of non-road diesel equipment or on-road trucks, not previously accounted for, are brought onto the Project Site. Provide the updated list to the Engineer upon request.

On a monthly basis certify compliance with OAR 731-005-800 or OAR 731-149-0020 and submit the certification with a list of non-road diesel equipment and on-road trucks specified in (1) and (2) below utilized to date on the Project Site to the Engineer and include calculations demonstrating compliance according to OAR 731-005-800 or OAR 731-149-0020.

Failure to submit the monthly listings, certifications and calculations may result in withholding payments according to 00195.50(e).

Immediately remove from the Project Site, according to 00180.30, non-road diesel equipment and on-road trucks used on the Project Site in violation of OAR 731-005-800

or OAR 731-149-0020, or 00290.30. Update the listing of non-road diesel equipment and on-road trucks with a notation for any that were removed.

(1) Non-Road Diesel Equipment - Demonstrate compliance with OAR 731-005-800 or OAR 731-149-0020 by listing all non-road diesel equipment (as defined in OAR 731-005-0430) that is 25 horsepower or greater utilized to date on the Project Site and including the following:

- Equipment owner and whether the piece of equipment is owned and operated by a COBID certified firm
- Equipment type
- Manufacturer
- Model number
- Vehicle identification number or serial number
- Engine certification (Tier rating)
- If not equipped with a Tier 4 compression ignition diesel engine, specify whether the engine has been retrofitted with a Verified Diesel Oxidation Catalyst or Verified Diesel Particulate Filter
- Specify whether the equipment qualifies for an exemption provided in OAR 731-005-0800(5) or OAR 731-149-0020(4) and which exemption applies
- The above required certifications and calculations

(2) On-Road Concrete Mixer Trucks and Dump Trucks - Demonstrate compliance with OAR 731-005-800 or OAR 731-149-0020, by listing all diesel powered on-road concrete mixer trucks and on-road dump trucks utilized to date on the Project Site that are owned or operated by the Contractor, Subcontractors and those operated under trucking services agreements, including:

- Equipment owner and whether the piece of equipment is owned and operated by a COBID certified firm
- Vehicle identification number or serial number
- Engine model year
- Motor vehicle license plate number
- The above required certifications and calculations

00290.34 Protection of Fish and Fish Habitat - Add the following paragraph:

Meet with the Agency Biologist, Resource Representative, Engineer, and inspector on site, before moving equipment on-site or beginning any work, to ensure that all parties understand the locations of sensitive biological sites and the measures that are required to be taken to protect them.

00290.34(a) Regulated Work Areas - Add the following to the end of this subsection:

The regulated work area is the area at or below the ordinary high water (OHW) elevation shown on the plans.

Perform work within the regulated work area only during the in-water work period. The in-water work period is from July 15, 2023 to September 30, 2023.

The total volume of material excavated from the waters of the State and waters of the U.S. shall not exceed 60 cubic yards.

Submit a schedule to complete all work within the regulated work area within the in-water work period at least 10 days prior to the preconstruction conference.

Add the following subsection:

00290.34(c) Aquatic Species Protection Measures Required by Environmental Permits:

(1) General Requirements:

- Do not install fish ladders (for example: pool and weirs, vertical slots, fishways) or fish trapping systems.
- Do not apply surface fertilizer within 50 feet of any stream channel.

Use heavy equipment as follows:

- Operate heavy equipment from the top of a streambank and conduct work outside of the active stream channel.
- Equipment shall not be staged, fueled, or maintained within waters of the U.S.
- Choice of equipment must have the least adverse effects on the environment (for example: minimally sized, low ground pressure).
- Secure absorbent material around all stationary power equipment (for example: generators, cranes, drilling equipment) operated within 150 feet of wetlands, waters of the State, waters of the U. S., drainage ditches, or water quality facilities to prevent leaks, unless suitable containment is provided to prevent spills from entering waters of the State or waters of the U.S.
- Do not cross directly through a stream for construction access, unless shown or approved. If shown or approved, cross perpendicular to the stream and do not block stream flow. When a crossing is no longer needed, completely remove the crossing and restore the soils and vegetation to the original condition.
- Store fuel and maintain all equipment in staging areas that are at least 150 feet away from any waters of the State, waters of the U.S., or storm inlet or on an impervious surface that is isolated from any waters of the State, waters of the U.S., or storm inlet.
- If temporary access roads are needed within 150 feet of any body of water, use existing routes unless new routes are shown or approved.
- Before beginning work on temporary access routes that are not shown, submit a proposal to the Engineer for approval.

(2) Work Area Isolation - Provide work isolation according to Section 00245. Provide safe passage around or through the isolated work area for adult and juvenile migratory fish unless passage did not previously exist.

(3) Water Intake Screening - Install, operate, and maintain fish screens on each water intake used for project construction, including pumps used to isolate an in-water work area. When drawing or pumping water from any stream, protect fish by equipping intakes with screens having a minimum 27 percent open area and meeting the following requirements:

- Perforated plate openings shall be 3/32 inch or smaller.
- Mesh or woven wire screen openings shall be 3/32 inch or smaller in the narrowest direction.
- Profile bar screen or wedge wire openings shall be 1/16 inch or smaller in the narrow direction.

Choose size and position of screens to meet the following criteria in Table 00290-1:

Table 00290-1

Type	Approach Velocity [1] (Ft./Sec.)	Sweeping Velocity [2] (Ft./Sec.)	Wetted Area of Screen (Sq. Ft.)	Comments
Ditch Screen	≤ 0.4	Shall exceed approach velocity	Divide max. water flow rate (cfs) by 0.4 fps	If screen is longer than 4 feet, angle 45° or less to stream flow
Screen with proven self-cleaning system	≤ 0.4	–	Divide max. water flow rate (cfs) by 0.4 fps	–
Screen with no cleaning system other than manual	≤ 0.2	–	Divide max. water flow rate (cfs) by 0.2 fps	Pump rate 1 cfs or less

[1] Velocity perpendicular to screen face at a distance of approximately 3 inches
[2] Velocity parallel to screen

Provide ditch screens with a bypass system to transport fish safely and rapidly back to the stream.

(4) Special Aquatic Habitats - The following exploration or construction activities are not allowed in special aquatic habitats:

- Use of pesticides and herbicides, unless allowed according to Section 01030.
- Use of short pieces of plastic ribbon to determine flow patterns.
- Temporary roads or drilling pads built on steep slopes, where grade, soil type, or other features suggest a likelihood of excessive erosion or slope failure.

- Exploratory drilling in estuaries that cannot be conducted from a work barge, or an existing bridge, dock, or wharf.
- Installation of a fish screen on any permanent water diversion or intake that is not already screened.
- Drilling or sampling in an EPA-designated Superfund Site, a state-designated clean-up area, or the likely impact zone of a significant contaminant source, as identified by historical information, U. S. Army Corps of Engineers representative, or the Agency.

(5) Site Restoration - Restore damaged streambanks to a natural slope, pattern, and profile suitable for establishment of permanent woody vegetation unless precluded by pre-project conditions (for example: natural rock substrate):

- Replant all damaged streambanks before the first April 15 following construction.
- If use of large wood, native topsoil, or native channel material is required for the site restoration according to the roadside development plans, stockpile all large wood, native vegetation, weed-free topsoil, and native channel material displaced by construction. Cut trees or large wood and trees into pieces of no less than 20 feet in length, or as shown on the roadside development plans or as directed. Stockpiled native wood and vegetation remain the property of the Agency.
- Stabilize all disturbed soils, including obliteration of temporary access roads, following any break in work unless construction will resume in 4 Calendar Days.

(6) Surface Water Diversions - Surface water may be diverted to meet construction needs other than work area isolation, consistent with Oregon law, only if water from sources that are already developed, such as municipal supplies, small ponds, reservoirs, or tank trucks, is unavailable or inadequate, and meeting the following conditions:

- When alternative surface sources are available, divert from the stream with the greatest flow.
- Install, operate, and maintain a temporary fish screen.
- Do not exceed a pumping rate and volume of 10 percent of the available flow. For streams with less than 5 cubic feet per second, do not exceed drafting of 18,000 gallons per day. Do not use more than one pump for each site.

(7) Treated Wood - Treated wood includes any wood treated with any pesticide or wood preservatives. Do not use lumber, pilings, or other wood products that are treated or preserved with pesticidal compounds below the ordinary high water (OHW) or as part of an in-water or over-water structure, except as described below:

- Store treated wood shipped to the Project out of contact with standing water and wet soil, and protected from precipitation.
- Visually inspect each load and piece of treated wood. Reject for use in or above aquatic environments if visible residues, bleeding of preservative, preservative-saturated sawdust, contaminated soil, or other matter is present.

- Use pre-fabrication to the extent feasible. When field fabrication is necessary, all cutting and drilling of treated wood, and field preservative treatment of wood exposed by cutting and drilling, shall occur above the OHW. Use tarps, plastic tubs, or similar devices to contain the bulk of any fabrication debris, and wipe off any excess field preservative.
- All treated wood structures, including pilings, shall have design features to avoid or minimize impacts and abrasion by livestock, pedestrians, vehicles, vessels, and floats.
- Treated wood may be used to construct a bridge, over-water structure or an in-water structure, with the exception of the work containment system, provided that all surfaces exposed to leaching by precipitation, overtopping waves, or submersion are coated with a water-proof seal or barrier are maintained. Apply and contain coatings and paint-on field treatment to prevent contamination. Surfaces that are not exposed to precipitation or wave attack, such as parts of a timber bridge completely covered by the bridge deck, are exempt from this requirement.
- During demolition of treated wood, ensure that no treated wood debris falls into the water. If treated wood debris does fall into the water, remove it immediately.
- Store removed treated wood debris in appropriate dry storage areas, at least 150 feet away from the regulated work area.

(8) Temporary Power, Communication and Water Lines - Before installing temporary power, communication, or water lines across streams or bodies of water, submit a proposed plan to the Engineer for approval. Do not begin installation before receiving approval from the Engineer. Proposed plans for installation of temporary power, communication, and water lines and stream crossings shall utilize the following design methods in the listed order of priority:

1. Aerial lines, including lines hung from existing bridges.

2. Directional drilling, boring and jacking that spans the channel migration zone and any associated wetland.

3. Trenching, which is restricted to intermittent streams and may only be used when the stream is naturally dry. For all sections of trenches below the ordinary high water line, backfill with native material and cap with clean gravel suitable for fish use in the project area.

Align each crossing as perpendicular to the watercourse as possible. For drilled, bored, or jacked crossings, ensure that the line is below the total scour prism. Return any large wood displaced by trenching or plowing as nearly as possible to its original position, or otherwise arranged to restore habitat functions.

(9) Injured Fish Notification - If a dead or injured fish is found in the project area, immediately notify the Agency. If the injured fish is in a location where further injury or stress may take place, attempt to move the fish to a safer location, if one is available, near the capture site while keeping the fish in the water and reducing its stress as much as possible. Do not disturb the fish after it has been moved. If the fish is dead or dies

while being captured or moved, save the fish and any tags. The Agency will notify appropriate regulatory agencies about the injured or dead fish and provide additional direction to the Contractor.

00290.36(a) Migratory Birds - Add the following to the end of this subsection:

Do not disturb migratory bird nesting habitat (shrubs, trees, and structures), or clear vegetation from March 1 to September 1 of each year without prior written approval from the Engineer. Notify the Engineer, in writing, a minimum of 10 Calendar Days prior to starting activities that could harm nesting birds.

(1) Bird Management - Bird management activities to comply with the Migratory Bird Treaty Act (16 U.S.C. 703 712) will be performed by the Agency. Ensure that the Agency and its permitted agents have access to the project area, as needed to prevent migratory bird nesting. Nesting prevention may include daily bird harassment and the installation and maintenance of devices that exclude birds.

Do not disturb migratory bird nesting habitats (shrubs, trees, and structures), or clear vegetation from March 1 to September 1 of each calendar year without prior written approval from the Engineer. Notify the Engineer, in writing, a minimum of 10 Calendar Days prior to starting activities that could harm nesting birds.

Add the following subsection:

00290.42 Work Containment Plan - A Work Containment Plan (WCP) is required on this Project for in-water work activity(ies).

Develop and submit a WCP for approval at least 14 Calendar Days prior to mobilization for in-water work activity(ies). Maintain a copy of the WCP on the Project Site at all times during construction, readily available to employees and inspectors. Ensure that all employees comply with the provisions of the WCP. Design the WCP to avoid or minimize disturbance to protected features (sensitive cultural or natural resources, regulated work areas, aquatic life or habitat in regulated work areas) related to Contractor operations.

Before developing the WCP, meet with Agency to review the Contractor's activities that require the WCP to ensure that all parties understand the locations of protected features to be avoided and the measures needed to avoid and protect them.

Notify the Engineer at least 10 Calendar Days before beginning work access or containment construction activities.

The Agency reserves the right to stop Work and require the Contractor to change the WCP methods and Equipment before any additional Contract Work, at no additional cost to the Agency, if and when, in the opinion of the Agency, such methods jeopardize sensitive cultural or natural resources, regulated work areas, or aquatic life or habitat in regulated work areas.

The WCP shall identify how the Contractor's construction operations will protect regulated features during mobilization, construction, maintenance, and demolition.

Include a narrative describing compliance with Section 00290 as related to construction, operation, and demolition activities specified in Section 00253.

Design, construct, maintain, and remove temporary work access and containment systems according to Section 00253.

00290.90 Payment - Add the following paragraph(s) to the end of this subsection:

The work containment plan will be paid for at the Contract lump sum amount for the item "Work Containment Plan".

Payment will be payment in full for furnishing all Materials, Equipment, labor, and Incidentals necessary to complete the Work as specified. Payment includes providing and updating the Work Containment Plan.

The accepted quantities of turbidity monitoring will be paid for at the Contract lump sum amount for the item "Turbidity Monitoring".

Payment for turbidity monitoring will be payment in full for furnishing and placing all Materials and for furnishing all Equipment, labor, and Incidentals necessary to complete the Work as specified.

SECTION 00305 - CONSTRUCTION SURVEY WORK

Comply with Section 00305 of the Standard Specifications modified as follows:

00305.00 Scope – Add the following to the end of this subsection:

In addition to the requirements of the ODOT *Construction Surveying Manual for Contractors*, establish Engineering Stationing at 25 foot intervals for the length of the project along the shoulder of the highway. Maintain the stationing so it is visible throughout construction of the project.

00305.05 3D Engineered Models - Replace the bullet that begins “A detailed outline and list of…” with the following bullet:

- An automated machine guidance (AMG) work plan containing a detailed outline, list of the Pay Items and Work that will be controlled by the 3D Construction Models, and a narrative outlining any differences between the Agency prepared 3D Engineered Models and the 3D Construction Models.

Delete the bullet that begins “A narrative outlining…”

SECTION 00310 - REMOVAL OF STRUCTURES AND OBSTRUCTIONS

Comply with Section 00310 of the Standard Specifications modified as follows:

00310.00 Scope - Add the following:

- This work shall include the removal of 24” storm line.
- Road surface and underlying fill.

00310.80 Measurement - The quantities of removal Work performed under this Section will be measured according to the following:

- Lump Sum Basis - Under this method, no measurement of quantities will be made.

00310.90 Payment - Add the following to the end of this subsection:

No separate or additional payment will be made for removal or disposal Work included in Section 00330 according to 00310.02.

SECTION 00320 - CLEARING AND GRUBBING

Comply with Section 00320 of the Standard Specifications modified as follows

00320.40(a) Clearing Trees and Other Vegetation - Add the following to the end of this subsection:

Upon receiving Notice to Proceed, and confirmation that affected right-of-way and/or easements have been received, the Contractor shall clear affected vegetation and remove all nesting habitat as required for project construction. To minimize erosion, only remove vegetation above ground surface until construction work is ready to begin in each area of vegetation removal (See 00290.36(a)).

00320.42 Disposal of Matter - Replace this subsection with the following subsection:

00320.42 Ownership and Disposal of Matter - Cut timber is the property of the property owner of 21819 SE 427th Ave. All other matter and debris accumulated from clearing and grubbing operations become the Contractor’s property at the place of origin. Dispose of all matter and debris according to 00290.20.

Contractor shall contact the property owner for location to place salvaged material/timber.

00320.90 Payment – Add the following:

No separate or additional payment will be made for trimming existing trees or shrubs that are adjacent to improvements as required or as directed by the Engineer.

SECTION 00330 - EARTHWORK

Comply with Section 00330 of the Standard Specifications modified as follows:

00330.41(a)(5) Waste Materials - Replace this subsection, except for the subsection number and title, with the following:

Unless otherwise specifically allowed and subject to the requirements of Section 00280, dispose of materials, classed as waste materials in 00330.41(a)(3), outside and beyond the limits of the Project and Agency controlled property according to 00290.20. Do not dispose of materials on Wetlands, either public or private, or within 300 feet of rivers or streams.

Contractor shall provide written certification to Clackamas County DTD that the waste material is placed in a state approved and local agency approved location. Certification must be delivered to County prior to material leaving the site.

SECTION 00350 - GEOSYNTHETIC INSTALLATION

Comply with Section 00350 of the Standard Specifications modified as follows:

00350.01 Definitions - Replace the sentence that begins "**Embankment Geotextile** - For installation…" with the following sentence:

Embankment Geotextile - Embankment geotextile is used as a reinforcement within embankments and as a separation and reinforcement under embankments.

Replace the bullet that begins "**Nonwoven Geotextile** - A textile…" with the following bullet:

- **Nonwoven Geotextile** - A textile produced by bonding or interlocking of fibers by mechanical, heat or chemical means.

Replace the sentence that begins "**Riprap Geotextile** - For installation…" with the following sentence:

Riprap Geotextile - Riprap geotextile is used as a filter and separator behind or beneath riprap, Buttresses, inlays, shear keys and erosion control applications.

Replace the sentence that begins "**Subgrade Geotextile** - For installation…" with the following sentence:

Subgrade Geotextile - Subgrade geotextile is used as a separator and reinforcement on Subgrades and in other material separation applications.

00350.41(f)(5) Geotextile Placement - Replace the paragraph that begins "Slit wrinkles or folds …" with the following paragraph:

Slit wrinkles or folds exceeding 1 inch and lay flat. Shingle-lap not more than 6 inches in the direction of the paving. Broom or squeegee to smooth the geotextile and pneumatic roll to maximize geotextile contact with the Pavement surface. Additional hand-placed sealant material may be required at laps as determined.

SECTION 00390 - RIPRAP PROTECTION

Comply with Section 00390 of the Standard Specifications.

SECTION 00405 - TRENCH EXCAVATION, BEDDING, AND BACKFILL

Comply with Section 00405 of the Standard Specifications modified as follows:

00405.41(a) Within Paved Areas to be Preserved - Add the following to the end of this subsection:

Do not use the open excavation method for installing pipes transversely.

SECTION 00445 - SANITARY, STORM, CULVERT, SIPHON, AND IRRIGATION PIPE

Comply with Section 00445 of the Standard Specifications modified as follows:

00445.70 General - Replace this subsection, except for the subsection number and title, with the following:

(a) Culvert Installations - Inspect culverts to ensure that the lines are free of obstructions and leakage.

SECTION 00510 - STRUCTURE EXCAVATION AND BACKFILL

Comply with Section 00510 of the Standard Specifications modified as follows:

00510.80(a) Lump Sum – Delete this subsection and replace with;
Under this method, no measurement will be made the estimated neat line quantity of structure excavation, estimated quantities are

Location	Structure Excavation (Cubic Yard)
Sta 2+50 to Sta 3+16	680 CY

(1) Structure Excavation and Granular Structure Backfill Below Elevations Shown - Structure excavation and backfill below elevations shown will be measured according to the following:

- **0 to 3 Feet Below Elevations** - For excavation 0 to 3 feet below elevations shown, measurement will be determined according to 00190.10(h) and based on a theoretical unit price of the lump sum structure excavation item.
- **More than 3 Feet Below Elevations** - For excavation more than 3 feet below elevations shown, measurement will be determined according to 00195.20.

00510.80(b)(1) Lump Sum - Add the following to the end of this subsection::

Under this method, no measurement will be made the estimated neat line quantity of granular structure backfill, estimated quantities are:

Location	Granular Structure Backfill (Cubic Yard)
Sta 2+50 to Sta 3+16	610 CY

00510.90 Payment - The accepted quantities of Work performed under this Section will be paid for as follows:

(a) Structure Excavation - Structure excavation will be paid for at the Contract lump sum amount for the item "Structure Excavation".

Except for granular structure backfill, no separate or additional payment will be made for backfilling and compacting to the elevation specified.

Structure Excavation and Granular Structure Backfill Below Elevations Shown - Structure excavation and backfill below elevations shown will be paid for as follows:

Lump Sum - For excavation 0 to 3 feet below elevations shown, payment will be determined and made according to 00190.10(h). For excavation more than 3 feet below elevations shown, payment will be determined and made according to 00195.20.

(b) Granular Structure Backfill - The accepted quantities of backfill will be paid for at the Contract unit price for the following items:

	Pay Item	Unit of Measurement
(a)	Granular Wall Backfill	Lump Sum

Payment will be payment in full for furnishing and placing all Materials, and for furnishing all Equipment, labor, and Incidentals necessary to complete the Work as specified.

No separate or additional payment will be made for: bedding excavations made beyond the limits shown or beyond the limits directed, or below the elevations established for the bottoms of the footings, bases, cofferdams, or walls including bedding, water removed from excavations and water used in compaction or other items of Work.

SECTION 00640 - AGGREGATE BASE AND SHOULDERS

Comply with Section 00640 of the Standard Specifications.

SECTION 00730 - EMULSIFIED ASPHALT TACK COAT

Comply with Section 00730 of the Standard Specifications modified as follows:

00730.90 Payment - Replace this subsection, except for the subsection number and title, with the following:

No separate or additional payment will be made for Emulsified Asphalt tack coat. Approximately 0.6 Tons of Emulsified Asphalt in tack coat will be required on this Project.

SECTION 00744 - ASPHALT CONCRETE PAVEMENT

Comply with Section 00744 of the Standard Specifications modified as follows:

00744.11(a) Asphalt Cement - Add the following to the end of this subsection:

Provide 64-22 grade asphalt cement for this Project.

00744.16 Sampling and Testing - Replace this subsection, except for the subsection number and title, with the following:

For each 1,000 Tons of placement, have a CAT I perform a minimum of one of each of the following test methods as modified in the MFTP:

- Asphalt Content - AASHTO T 308 with ODOT TM 323 determined Calibration Factor
- Gradation - AASHTO T 30
- Mix Moisture - AASHTO T 329
- Maximum Specific Gravity - AASHTO T 209
- Field Compacted Gyratory Specimens - ODOT TM 326

When less than 1,000 Tons of mix is placed in a Day, perform a minimum of one series of tests per Day. Provide test results to the Engineer by the middle of the following work shift. The Engineer may waive the requirement for any of AASHTO T 308, AASHTO T 30, AASHTO T 329, and ODOT TM 326 on a daily basis. The Engineer may waive the requirement for AASHTO T 209 when less than 500 Tons of ACP is placed in a single work shift.

Provide samples or split samples to the Engineer when requested.

SECTION 01030 - SEEDING

Comply with Section 01030 of the Standard Specifications modified as follows:

01030.13(f) Types of Seed Mixes - Add the following to the end of this subsection:

Provide the following seed mix formulas:

- **Permanent Seeding, Mix No. 1**

Botanical Name (Common Name)	**PLS Specified Rate (lb/acre)**
Elymus glaucus (blue wildrye)	26.1
Hordeum brachyantherum (meadow barley)	13.0
Bromus carinatus (California brome)	4.3
Lupinus rivularis (riverbank lupine)	1.0

* Oregon Certified Seed

01030.13(g) Availability - Add the following sentence to the end of this subsection:

Submit the seed and seed mixes to be used on the project according to 00150.37.

01030.15 Mulch - Add the following paragraphs and bullets to the end of this subsection:

Furnish mulch for seeding in accordance with 01030.15.

Projects that have variable slopes may include straw mulch and hydromulch when approved.

01030.40 General - Add the following sentence after the sentence beginning “Notify the Agency…”:

Notify the Agency of the acreage to be seeded at least 7 Days before seeding begins.

01030.60 General - Add the following sentences after the last bullet:

The minimum living plant coverage for woody or other plant seeding is 90 percent of ground surface.

Landscape Planting shall conform to the standards established under Water Environment Services (WES).

All plant material delivered to the site shall meet the American Standard for Nursery Stock Standards.

Contractor shall obtain written approval for all plant material substitutions from the Agency prior to installation. Plant substitutions without prior written approval that do not comply with the drawings and specifications may be rejected by the Engineer at no cost to the Owner. These items may be required to be replaced with plant materials that are in compliance with the drawings.

SECTION 01040 - PLANTING

Comply with Section 01040 of the Standard Specifications modified as follows:
Add the following: **01040.19(i) Plants** – Provide plants as follows:

Botanical Name (Common Name)	**Type**	**Number**
Thuja plicata (western red cedar)	1-gallon container	9
Pseudotsuga menziesii (Douglas fir)	1-gallon container	13
Salix scouleriana (Scouler's willow)	cutting	20
Salix sitchensis (sitka willow)	cutting	20
Cornus sericea (Red osier dogwood)	cutting	15

01040.80(b) Topsoil and Wetland Topsoil - Replace the paragraph that begins "Topsoil and wetland Topsoil will be measured…" with the following paragraph:

Topsoil and wetland Topsoil will be measured on the volume basis at the time of placement. Trucking invoices may be used to determine volumes if the quantities are verifiable to the satisfaction of the Engineer.

01040.80(f) Mulch - Replace this subsection, except for the subsection number and title, with the following:

Mulch will be measured on the volume basis at the time of placement, or on the weight basis. Trucking invoices may be used to determine volumes if the quantities are verifiable to the satisfaction of the Engineer.

01040.90(d) Plant Materials - Replace the paragraph that begins "Partial payments for plant Materials will…" and the partial payment table with the following paragraph and table:

Partial payments for plant Materials will be made as follows:

At the time of the original planting 60%
After the first plant establishment inspection 10%

After the second plant establishment inspection..... 10%
After the third plant establishment inspection 10%
At completion of the establishment period 10%

SECTION 01050 - FENCES

Comply with Section 01050 of the Standard Specifications.

SECTION 01091 - WATERWAY ENHANCEMENTS

Section 01091, which is not a Standard Specification, is included in this Project by Special Provision.

DESCRIPTION

01091.00 Scope - This Work consists of constructing waterway enhancements such as fish Rocks, large woody Material (LWM), engineered streambed Material, and other types of waterway items as shown or directed.

01091.05 Pre-Work Meeting - Attend a pre-work meeting at the Project Site with the Engineer, at a mutually agreed upon time, at least 8 Calendar Days prior to implementation of any waterway enhancement work. Required attendees include:

- Engineer
- Contractor
- Waterway Enhancement Subcontractors

The pre-work meeting agenda typically includes the methods of accomplishing all phases of the waterway enhancement work, including:

- temporary water management (TWM)
- fish salvage plan and strategy
- environmental risks discussion
- turbidity monitoring
- energy dissipation for dewatering and diverted stream flows
- dewatering and re-watering plan and strategy
- existing streambed Material salvage
- site clean-up expectations
- circumstances under which contacting the Engineer is required

Representatives from interested permitting agencies will be invited by the Agency.

MATERIALS

01091.10 Material - Furnish Materials meeting the following requirements:

(a) Fish Cobble - 6 inch to 3/16 inch, uncrushed, clean, hard, durable material that is well graded from the maximum size to the minimum size. Fish Cobble mix shall

consist of a rounded boulder and cobble mixture simulating a natural creek channel material.

The mix shall have enough fines to help seal the rocks and prevent subsurface flow within the creek channel. The Contractor shall provide a sample to the Engineer for review and approval prior to the haul and placement of the material.

(c) Fish Rocks:

Type 1 - 700 pounds to 900 pounds size, hard, durable, angular shaped Rock. Furnish a single Rock with a thickness of not less than one-third its length. Round Rock, non-durable Rock, shale, or Rock with shale seams will not be accepted.

Type 2 - Greater than 900 pounds to 1,800 pounds size, hard, durable, angular shaped Rock. Furnish a single Rock with a thickness of not less than one-third its length. Round Rock, non-durable Rock, shale, or Rock with shale seams will not be accepted.

Type 3 - Greater than 1,800 pounds to 2,200 pounds size, hard, durable, subangular Rock. Furnish a single Rock with a thickness of not less than three-fourths its length. Non-durable Rock, shale or Rock with shale seams will not be accepted.

Type 1 Fish Rocks as shown and placed as directed.

CONSTRUCTION

01091.40 General - Obtain all permits and perform Work in and around water according to Section 00290, Section 00245 and the following:

(a) Streambed Excavation - Excavate the foundation for streambed Materials to the elevations and grades as shown. As directed by the Engineer, excavate scour holes in the approximate locations as shown.

(b) Fish Cobble - Place engineered streambed Material in the stream channel as shown or directed. Place the streambed Material in lifts no thicker than 12 inches. Provide streambed Material in its final location with a well graded mix of streambed sediments and streambed Cobbles.

Construct streambed Material to ensure that low stream flows are conveyed above the finished channel. Pressure apply water to each placed layer to facilitate filling the interstitial voids of the streambed Materials with streambed Sand. The voids are satisfactorily filled when water equivalent to the flow rate of the stream does not go subsurface and there is visual acceptance by the Engineer. If water is not present in the stream, apply water to the stream channel for visual acceptance by the Engineer.

(c) Fish Rocks - Place Rocks as shown or as directed.

MEASUREMENT

01091.80 Measurement - Work performed under this Section will be measured according to the following:

a) **Streambed Excavation – will not measured as it incidental to fish cobble**

b) **Fish Cobble** - The quantities of Fish Cobble will be measured on the unit basis, streambed excavation is incidental to fish cobble.

c) **Fish Rocks** - The quantities of fish Rocks will be measured on the unit basis.

01091.90 Payment - The accepted quantities of Work performed under this Section will be paid for at the Contract lump sum amount for the item "Streambed Enhancement".

01091.90 Payment - The accepted quantities of waterway enhancement items will be paid for at the Contract unit price, per unit of measurement, for the following items:

Pay Item	Unit of Measurement
(a) Fish Cobble	Ton
(b) Fish Rocks, Type 1	Each

Payment will be payment in full for furnishing and placing all Materials, and for furnishing all Equipment, labor, and Incidentals necessary to complete the Work as specified.

SECTION 02320 - GEOSYNTHETICS

Comply with Section 02320 of the Standard Specifications modified as follows:

02320.10(a)(1) Geotextiles - Add the following bullet to the beginning of the bullet list:

- QPL approved for the intended application.

02320.10(b) Acceptance Requirements - Replace this subsection with the following subsection:

02320.10(b) Identification - Identify geotextiles by the product name printed directly on the geotextile by the Manufacturer. For all other geosynthetics and when geotextiles are not marked with a product name, identify geosynthetics by the product label attached to the original packaging or the geosynthetic itself by the Manufacturer.

Allow the Engineer to visually verify geosynthetic products before installation. Open packaged geosynthetics before use in the presence of the Engineer to confirm the correct product. Geotextile rolls without the product name printed on the geotextile or the product label affixed to the geotextile or roll core by the Manufacturer will be rejected.

Any other geosynthetics that are unwrapped, missing original packaging or previously opened may not be used unless approved by the Engineer.

02320.10(c)(1) Geotextiles - Replace this subsection, except for the subsection number and title, with the following:

Geotextile products listed in the QPL that are identified as “NTPEP listed” in the remarks column have been approved based on participation in the AASHTO National Transportation Product Evaluation Program (NTPEP) and test data from the program. Manufacturer’s test certification is not required for NTPEP listed geotextiles from the QPL. For other geotextiles, include the following unless directed otherwise:

- QPL product category and proposed project application.
- Product name printed directly on the geotextile by the Manufacturer. For geotextiles that are not marked with a product name, provide geotextile with product label attached to the geotextile or original packaging by the Manufacturer.
- Manufacturer’s name, lot number, roll number, production facility address, and full product information (style, brand, name, etc.).
- Chemical composition of filaments and yarns, including polymer(s) used.
- Minimum average roll values for each of the specified properties from the same lot of geotextiles as the delivered material.

Tickle Creek - 427th Avenue Culvert Replacement

Final Design

CLACKAMAS COUNTY, OREGON

May 2023

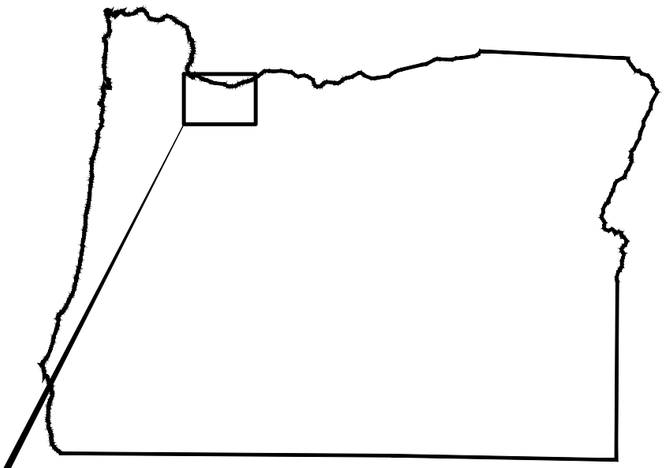

STATE OF OREGON

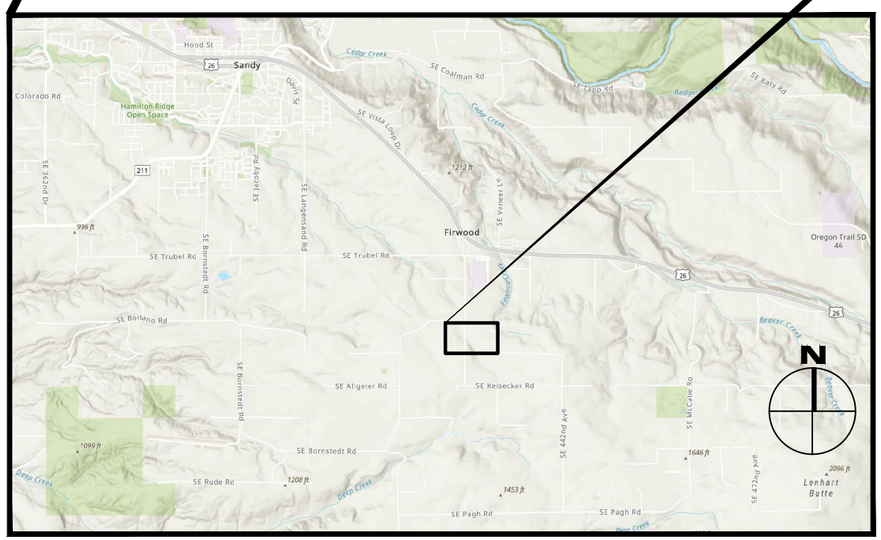

VICINITY MAP

NOT TO SCALE

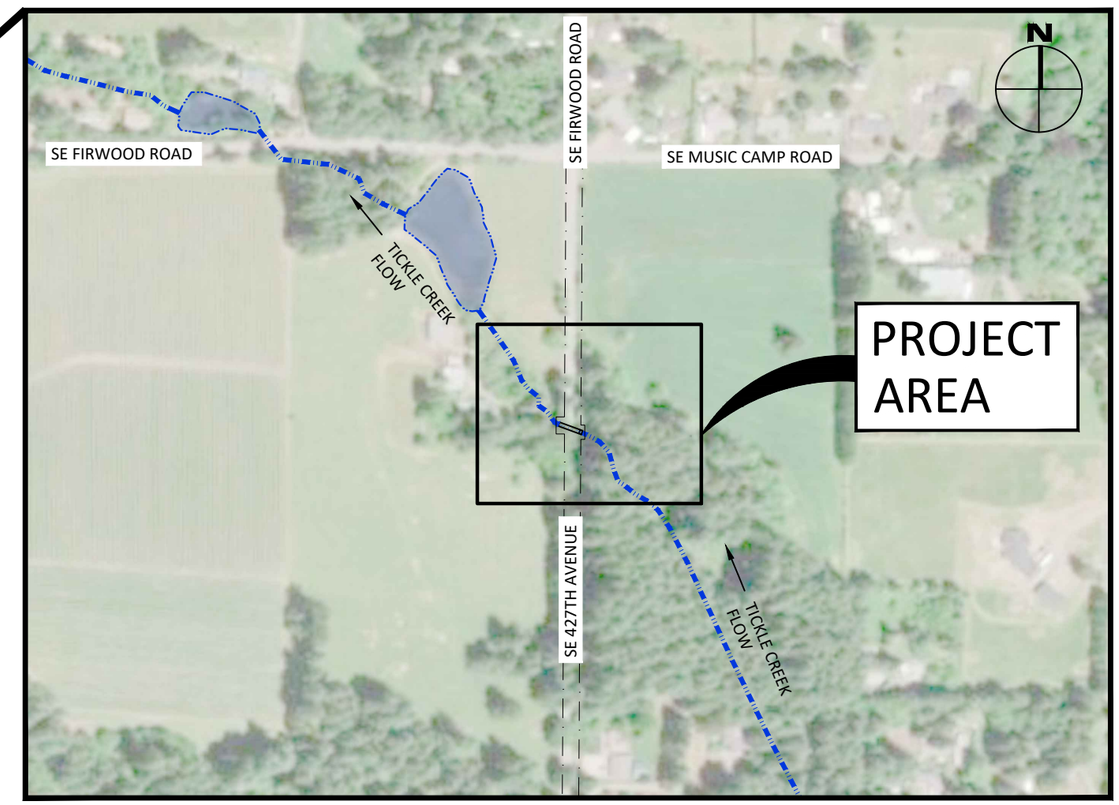

SITE MAP

NOT TO SCALE

SHEET INDEX

1 - COVER SHEET, LOCATION MAP, AND SHEET INDEX
2 - GENERAL NOTES
3 - SITE MAP - EXISTING CONDITIONS AND ACCESS
4 - SITE MAP - EXISTING CONDITIONS AND DEWATERING
5 - SITE MAP - EROSION CONTROL, STAGING, AND DIVERSION
6 - PLAN VIEW - PROPOSED CONDITIONS
7 - PLAN AND PROFILE VIEW - PROPOSED CONDITIONS
8 - GRADING CROSS-SECTIONS
9 - TYPICAL DETAILS
10 - TYPICAL DETAILS
11 - TYPICAL DETAILS
12 - TYPICAL DETAILS
13 - PLAN VIEW - REVEGETATION

LOCATION

CLACKAMAS COUNTY, OREGON
LAT: 45°21'56.48"N
LAU: 122°13'28.54"W
SECTION: Section 29, T2S R5E

GEODETIC DATUM - NORTH AMERICAN DATUM OF 1983 (2011) EPOCH 2010
VERTICAL DATUM - NORTH AMERICAN VERTICAL DATUM OF 1988
COORDINATE SYSTEM - OCRS (PORTLAND ZONE)
PROJECTION - LAMBERT CONFORMAL CONIC

SITE INFORMATION

AFFECTED TAXLOTS:
PARCEL 25E29C00400
PARCEL 25E29C00300

SOIL TYPE: CORNELIUS SILT CLAY LOAM (NRCS)

REGISTERED PROFESSIONAL ENGINEER 18927PE OREGON FEB. 3, 1997 WILLIAM P. NORRIS

Expires: 12-31-2024

REV:	DESCRIPTION:	BY:	DATE:
STATUS: FINAL DESIGN			

PARR excellence
302 W. Steuben St. #6
Bingen, WA 98605
www.moreredds.com

CLIENT:
Clackamas County
150 Beavercreek Road
Oregon City, OR 97045

SITE: Tickle Creek - 427th Avenue Culvert Replacement

TITLE: COVER SHEET, LOCATION MAP, AND SHEET INDEX

SCALE:	DATE:	DRAWN:	CHECKED:
	5/15/2023	RP & PW	BN
PROJ. NO: -	DRAWING NO: 1		Total Sheets: 13

GENERAL NOTES

1. ALL WORK AND MATERIALS SHALL CONFORM TO THESE PLANS AND THE OREGON STANDARD SPECIFICATIONS FOR CONSTRUCTION AND SUPPLEMENTAL SPECIAL PROVISIONS.
2. TOPOGRAPHIC SURVEY BY: CLACKAMAS COUNTY DEPARTMENT OF TRANSPORTATION AND DEVELOPMENT, BRIAN W. PAULL, PLS 89074.
3. VEGETATION AND TOPSOIL ARE TO BE STRIPPED TO MINERAL EARTH AND APPROVED BY THE PRIMARY INSPECTOR PRIOR TO PLACEMENT OF FILL OR BASE MATERIALS.
4. ALL GAS OR DIESEL POWERED PUMPS MUST BE INSIDE OF CONTAINMENT POOLS.
5. SUBSEQUENT SETTLEMENT OR CRACKING OF FINISHED SURFACE WITHIN THE WARRANTY PERIOD SHALL BE CONSIDERED TO BE A FAILURE OF THE SUBGRADE AND REPAIRED AT NO COST TO THE COUNTY AND IN A MANNER ACCEPTABLE TO THE COUNTY.
6. THE CONTRACTOR SHALL CONTROL TRAFFIC THROUGH THE PROJECT SITE IN CONFORMANCE WITH THE LATEST EDITION OF THE MANUAL ON UNIFORM TRAFFIC CONTROL DEVICES, AND OREGON SUPPLEMENTS. THE CONTRACTOR SHALL, AT ALL TIMES, MAINTAIN LOCAL ACCESS FOR EMERGENCY VEHICLES, BUSINESSES, BUSES, AND HOMEOWNERS ALONG THE PROJECT SITE.
7. WHEN TRAFFIC DELAYS ARE TO BE EXPECTED, THE CONTRACTOR SHALL NOTIFY THE APPLICABLE AGENCIES, INCLUDING TRIMET, SCHOOL DISTRICT, EMERGENCY SERVICES, AND LOCAL BUSINESSES.
8. CONTRACTOR SHALL COORDINATE AND SCHEDULE ALL EARTHWORK, TRENCH BACKFILL AND ROAD CONSTRUCTION COMPACTION TESTS, AND GEOTECHNICAL REVIEWS WITH THE SOILS TESTING LAB AS REQUIRED FOR ACCEPTANCE OF PROJECT WORK BY CLACKAMAS COUNTY. COUNTY SHALL BE PROVIDED WITH ALL TEST RESULTS.
9. CONTRACTOR SHALL CAREFULLY MAINTAIN BENCHMARKS, PROPERTY CORNERS, MONUMENTS, AND OTHER REFERENCE POINTS PURSUANT TO ORS 209.140 AND ORS 209.150. IF SUCH POINTS ARE DISTURBED OR DESTROYED BY CONSTRUCTION ACTIVITIES, THE CONTRACTOR SHALL NOTIFY THE ENGINEER AND PAY FOR THEIR REPLACEMENT BY EMPLOYING A PROFESSIONAL LAND SURVEYOR TO RESET PROPERTY CORNERS & OTHER SUCH MONUMENTS.
10. FINAL CLEANUP - PRIOR TO FINAL ACCEPTANCE, THE CONTRACTOR SHALL CLEAN THE WORK SITE AND ADJACENT AREAS OF ANY DEBRIS, DISCARDED ACP, CONCRETE OR OTHER ITEMS DEPOSITED BY THE CONTRACTOR'S PERSONNEL DURING THE PERFORMANCE OF THIS CONTRACT.
11. PRIVATE DRIVEWAYS ARE TO REMAIN OPEN AT ALL TIMES.

GRADING NOTES

1. ALL FILLS ON PRIVATE PROPERTY MUST BE PLACED CONSISTENT WITH COUNTY CODE TITLE 9.03, EXCAVATION AND GRADING. SITE PREPARATION MUST INCLUDE THE REMOVAL OF VEGETATION, NON-COMPLYING FILL, TOPSOIL, OR OTHER UNSUITABLE MATERIAL PRIOR TO PLACEMENT OF THE FILL. FILL SLOPES SHALL NOT EXCEED A GRADE OF TWO HORIZONTAL TO ONE VERTICAL.
2. ALL CUTS ON PRIVATE PROPERTY SHALL BE MADE CONSISTENT WITH TITLE 9.03, EXCAVATION AND GRADING ORDINANCE. NO CUT SHALL EXCEED A GRADE OF TWO HORIZONTAL TO ONE VERTICAL UNLESS APPROVED BEFOREHAND BY CLACKAMAS COUNTY.
3. APPROPRIATE BENCHING OF FILLS IS REQUIRED FOR FILLS OVER FIVE FEET IN HEIGHT ON SLOPES IN EXCESS OF FIVE HORIZONTAL TO ONE VERTICAL. BENCHING MUST BE DONE IN ACCORDANCE WITH THE APPROVED PLANS. CLACKAMAS COUNTY SHALL INSPECT BENCHES PRIOR TO FILL PLACEMENT.
4. CUT AND FILL SLOPES AND ALL EXPOSED SOILS SHALL BE PROTECTED FROM EROSION AND BE IN COMPLIANCE WITH THE LOCAL SURFACE WATER AUTHORITY RULES, REGULATIONS, AND STANDARDS. SUCH CONTROL SHALL CONSIST OF TEMPORARY MEASURES DURING CONSTRUCTION AND PERMANENT MEASURES AT THE COMPLETION OF CONSTRUCTION ACTIVITIES; INCLUDING APPROPRIATE REVEGETATION OR OTHER ACCEPTABLE MEANS AND METHODS. TEMPORARY EROSION CONTROL MEASURES SHALL BE IN PLACE PRIOR TO EARTHWORK OR SITE STRIPPING.
5. THE CONTRACTOR SHALL NOTIFY THE PRIMARY INSPECTOR, COUNTY INSPECTOR, AND ENGINEER 48 HOURS PRIOR, FOR ALL REQUIRED EROSION CONTROL AND STRUCTURAL FILL INSPECTIONS AT THE FOLLOWING STAGES OF CONSTRUCTION:
   a. EROSION CONTROL INSPECTION PRIOR TO INITIATING CONSTRUCTION ACTIVITIES;
   b. PROOF ROLL ON SUBGRADE AND
   c. AT EVERY ONE FOOT OF STRUCTURAL FILL OR 300 CUBIC YARDS AND AT EVERY ONE FOOT OF STRUCTURAL FILL OR 300 CUBIC YARDS AND
   d. AT COMPLETION OF STRUCTURAL FILL BEFORE GEOTEXTILE FABRIC AND BASE AGGREGATE IS PLACED AND
   e. AT COMPLETION OF BASE AGGREGATE COURSE FOLLOWED BY DENSITY TESTING ON THE FINAL BASE COURSE PRIOR TO PAVING.

STREET & STORM DRAINAGE NOTES

1. STREET AND STORM DRAIN IMPROVEMENTS SHALL BE CONSTRUCTED IN ACCORDANCE WITH CLACKAMAS COUNTY ROADWAY STANDARDS AND THE APPROPRIATE SURFACE WATER DISTRICT. ALL STORM SEWER PIPES SHALL HAVE RUBBER GASKETS, WHICH SHALL PROVIDE A WATER TIGHT CONNECTION.
2. MATERIAL IN SOFT SPOTS WITHIN THE ROADWAY SHALL BE REMOVED TO THE DEPTH REQUIRED TO PROVIDE A FIRM FOUNDATION AND SHALL BE REPLACED WITH 1 1/2"-0" CRUSHED ROCK. THE ENTIRE SUBGRADE SHALL BE THOROUGHLY COMPACTED TO 95% AASHTO T-99
3. CONTRACTOR SHALL NOTIFY THE PROJECT MANAGER WHEN SUBGRADE IS COMPLETE AND 24 HOURS PRIOR TO PLACEMENT OF BASE ROCK MATERIAL. CONTRACTOR SHALL ALSO NOTIFY THE ENGINEER 24 HOURS PRIOR TO FINAL PAVING FOR AN INSPECTION OF THE WORK. CLACKAMAS COUNTY REQUIRES A PROOF ROLL WITH A FULLY LOADED 10-YARD DUMP TRUCK TO CHECK SUBGRADE COMPACTION PRIOR TO PLACEMENT OF ROCK SUBBASE AND AGAIN AT THE COMPLETION OF THE PLACEMENT OF THE BASE ROCK PRIOR TO PAVING THE FIRST LIFT OF ASPHALTIC CONCRETE.

USACE IN-WATER WORK PERIODS

WORK BELOW ORDINARY HIGH WATER SHALL BE CONDUCTED BETWEEN JULY 15 - SEPTEMBER 30.

CONSTRUCTION ACCESS/TRAFFIC CONTROL

THE CONTRACTOR SHALL KEEP THE WORK AREAS IN A CLEAN AND NEAT CONDITION FREE OF DEBRIS AND LITTER FOR THE DURATION OF THE PROJECT.

ALL AFFECTED AREAS INCLUDING ROADS AND ACCESS ROUTES SHALL BE RESTORED TO ORIGINAL CONDITION OR BETTER.

ALL DISTURBED AREAS OUTSIDE THE LIMITS OF DISTURBANCE SHALL BE RESTORED TO ORIGINAL CONDITION OR BETTER AT NO COST TO THE OWNER.

PUBLIC RIGHTS-OF-WAY SHALL BE KEPT IN A CLEAN AND SERVICEABLE CONDITION AT ALL TIMES. IN THE EVENT MATERIALS ARE INADVERTENTLY DEPOSITED ON ROADWAYS THE MATERIAL SHALL BE PROMPTLY REMOVED. MATERIALS ARE TO BE SWEPT AND REMOVED PRIOR TO ANY STREET FLUSHING.

QUANTITIES

LISTED IN SPECIAL PROVISIONS AND BID SCHEDULE.

ALL EARTHWORK QUANTITIES PROVIDED ARE IN-PLACE QUANTITIES. NO TRUCK MEASURE.

CONSTRUCTION MATERIALS

CLACKAMAS COUNTY TO PROVIDE CULVERT PIPE MATERIAL AND DELIVER ON-SITE WITH 10 DAYS WRITTEN NOTICE FROM CONTRACTOR. PIPE MATERIAL WILL BE AVAILABLE BY JULY 8, 2023, WHICH IS ONE WEEK BEFORE IN-WATER WORK PERIOD BEGINS.

ANY EXCESS MATERIALS SHALL BE PLACED IN TRUCKS AND HAULED OFF SITE. NO STOCKPILING.

CONTROL DEWATERING

MEET TURBIDITY STANDARDS REFERENCED IN SPECIAL PROVISIONS 00290.

TURBID OR CONTAMINATED DEWATERING WATER FROM CONSTRUCTION EQUIPMENT OPERATION SHALL BE PREVENTED FROM DELIVERING SEDIMENT TO THE STREAM. DISPOSAL OPTIONS FOR DEWATERING DISCHARGE INCLUDE:

1. SEDIMENT-LADEN WATER MAY BE PUMPED TO AN UPLAND AREA AND ALLOWED TO SHEET FLOW OVER UNDISTURBED GROUND THROUGH EXISTING VEGETATION TO INFILTRATE INTO THE GROUND.
2. USE OF AN APPROPRIATELY SIZED AND MAINTAINED SEDIMENTATION BAG (DIRTBAG) OR OTHER SEDIMENTATION FACILITY WITH OUTFALL TO A DITCH OR SWALE FOR SMALL VOLUMES OF LOCALIZED DEWATERING. STRAWBALE SETTLING BASIN MAY BE USED IN LIEU.

VEHICLE OPERATIONS AND STAGING

BEFORE OPERATIONS BEGIN AND AS OFTEN AS NECESSARY DURING OPERATION, PRESSURE WASH ALL EQUIPMENT THAT WILL BE USED BELOW BANKFULL ELEVATION UNTIL ALL VISIBLE EXTERNAL OIL, GREASE, MUD, AND OTHER
VISIBLE CONTAMINANTS ARE REMOVED.

CONTRACTOR SHALL PROVIDE BIODEGRADABLE LUBRICANTS AND FLUIDS USED ON EQUIPMENT OPERATING NEAR THE STREAM CHANNEL AND LIVE WATER.

FISH SALVAGE

FISH SALVAGE TO BE PERFORMED BY PACIFIC HABITAT SERVICES. CONTRACTOR TO PROVIDE 14 DAYS WRITTEN NOTICE TO PACIFIC HABITAT SERVICES TO PERFORM FISH SALVAGE.

ABBREVIATIONS

ACP	ASPHALT CONCRETE PAVEMENT
APPROX	APPROXIMATE
BMP	BEST MANAGEMENT PRACTICES
CY	CUBIC YARDS
DIA	DIAMETER
DBH	DIAMETER BREAST HEIGHT
EA	EACH
ELEV	ELEVATION
FT	FEET
HORIZ	HORIZONTAL
IN	INCHES
INV	INVERT
LWM	LARGE WOODY MATERIAL
MAX	MAXIMUM
MIN	MINIMUM
OHW	ORDINARY HIGH WATER
STA	STATION
TESC	TEMPORARY EROSION AND SEDIMENT CONTROL
TYP	TYPICAL
VERT	VERTICAL
WSE	WATER SURFACE ELEVATION
YR	YEAR

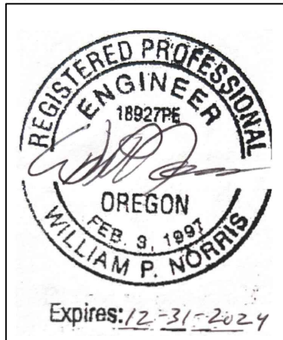

REV:	DESCRIPTION:	BY:	DATE:

STATUS: FINAL DESIGN

PARR excellence
302 W. Steuben St. #6
Bingen, WA 98605 www.moreredds.com

CLIENT: Clackamas County
150 Beavercreek Road
Oregon City, OR 97045

SITE: Tickle Creek - 427th Avenue Culvert Replacement

TITLE: GENERAL NOTES

SCALE:	DATE:	DRAWN:	CHECKED:
	5/15/2023	RP & PW	BN

PROJ. NO:	DRAWING NO:	Total Sheets:
-	2	13

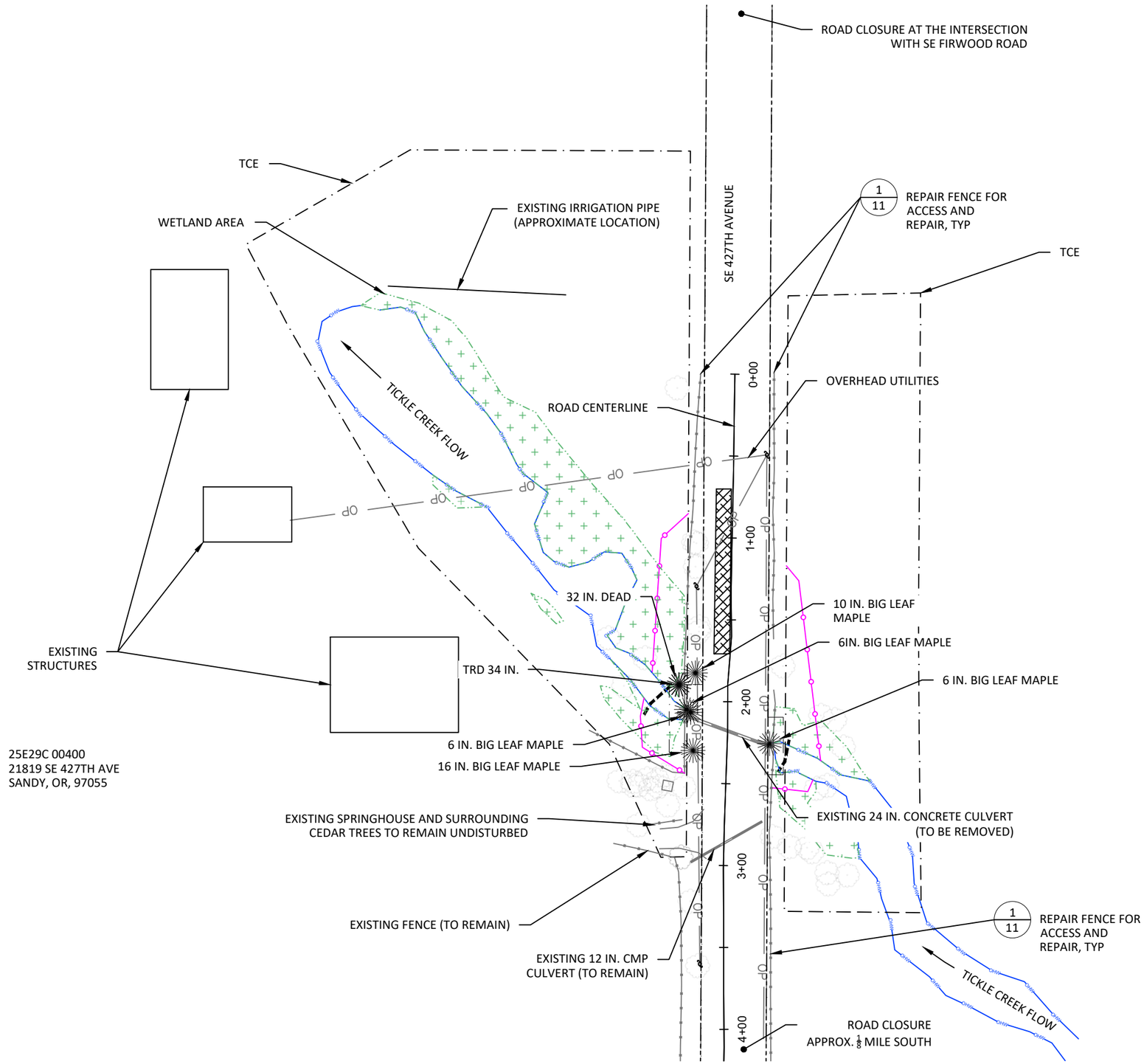

SITE MAP - EXISTING CONDITIONS AND ACCESS

LEGEND

- EXISTING CULVERT
- EXISTING RIGHT OF WAY
- PERMANENT STORMWATER EASEMENT
- ROAD CENTERLINE
- OVERHEAD POWER LINES
- UTILITY POLE
- EXISTING FENCE
- TEMPORARY CONSTRUCTION EASEMENT (TCE)
- CONSTRUCTION FENCE
- STAGING
- ORDINARY HIGH WATER (OHW)
- WETLAND AREA

N

0 60 120 Feet

NOTES:
ELEVATIONS ARE IN NAVD88.

- COFFERDAM
- DIVERSION PIPE
- DEWATERING PIPE
- PUMP
- PUMP INTAKE
- TURBIDITY MONITOR
- EXISTING TREE TO REMAIN
- EXISTING TREE TO REMOVE

REGISTERED PROFESSIONAL ENGINEER 18927PE OREGON FEB. 3, 1997 WILLIAM P. NORRIS

Expires: 12-31-2024

REV:	DESCRIPTION:	BY:	DATE:
STATUS: FINAL DESIGN			

PARR excellence
302 W. Steuben St. #6
Bingen, WA 98605
www.moreredds.com

CLIENT: Clackamas County
150 Beavercreek Road
Oregon City, OR 97045

SITE: Tickle Creek - 427th Avenue Culvert Replacement

TITLE: SITE MAP - EXISTING CONDITIONS AND ACCESS

SCALE:	DATE: 5/15/2023	DRAWN: RP & PW	CHECKED: BN
PROJ. NO: -	DRAWING NO: 3		Total Sheets: 13

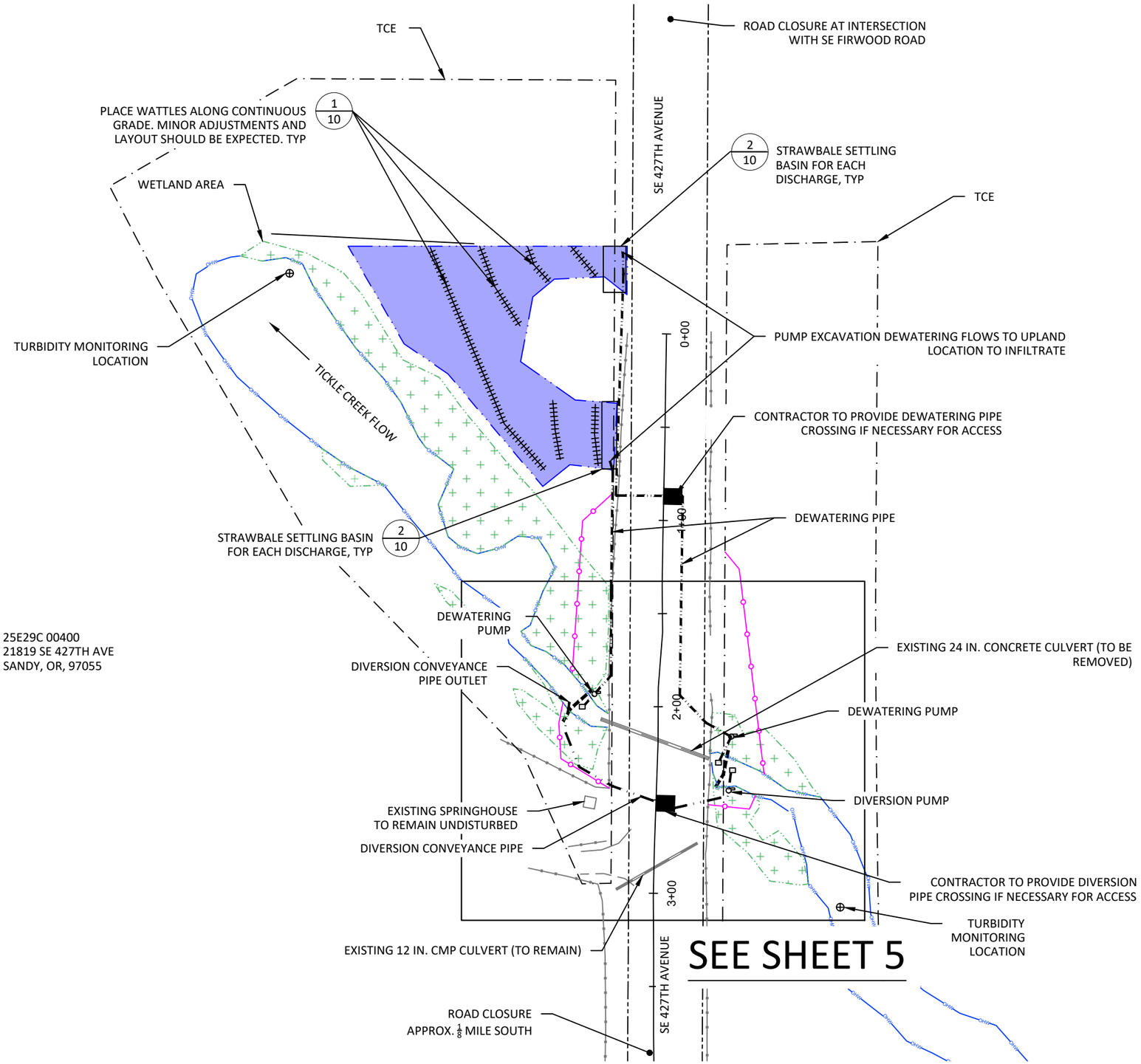

25E29C 00400
21819 SE 427TH AVE
SANDY, OR, 97055

25E29C 00300

SITE MAP - EXISTING CONDITIONS AND DEWATERING

N

LEGEND

- EXISTING CULVERT
- EXISTING RIGHT OF WAY
- EXISTING FENCE
- TEMPORARY CONSTRUCTION EASEMENT (TCE)
- CONSTRUCTION FENCE
- STAGING
- OHW — ORDINARY HIGH WATER (OHW)
- WETLAND AREA
- STRAW WATTLE
- INFILTRATION AREA
- DIVERSION PIPE
- DEWATERING PIPE
- COFFER DAM
- PIPE CROSSING
- PUMP
- PUMP INTAKE
- TURBIDITY MONITOR

0 60 120 Feet

NOTES:
ELEVATIONS ARE IN NAVD88.

REGISTERED PROFESSIONAL ENGINEER
18927PE
OREGON
FEB. 3, 1997
WILLIAM P. NORRIS
Expires: 12-31-2024

REV:	DESCRIPTION:	BY:	DATE:
STATUS: FINAL DESIGN			

PARR excellence
302 W. Steuben St. #6
Bingen, WA 98605
www.moreredds.com

CLIENT: Clackamas County
150 Beavercreek Road
Oregon City, OR 97045

SITE: Tickle Creek - 427th Avenue Culvert Replacement

TITLE: SITE MAP - EXISTING CONDITIONS AND DEWATERING

SCALE:	DATE: 5/15/2023	DRAWN: RP & PW	CHECKED: BN
PROJ. NO: -	DRAWING NO: 4		Total Sheets: 13

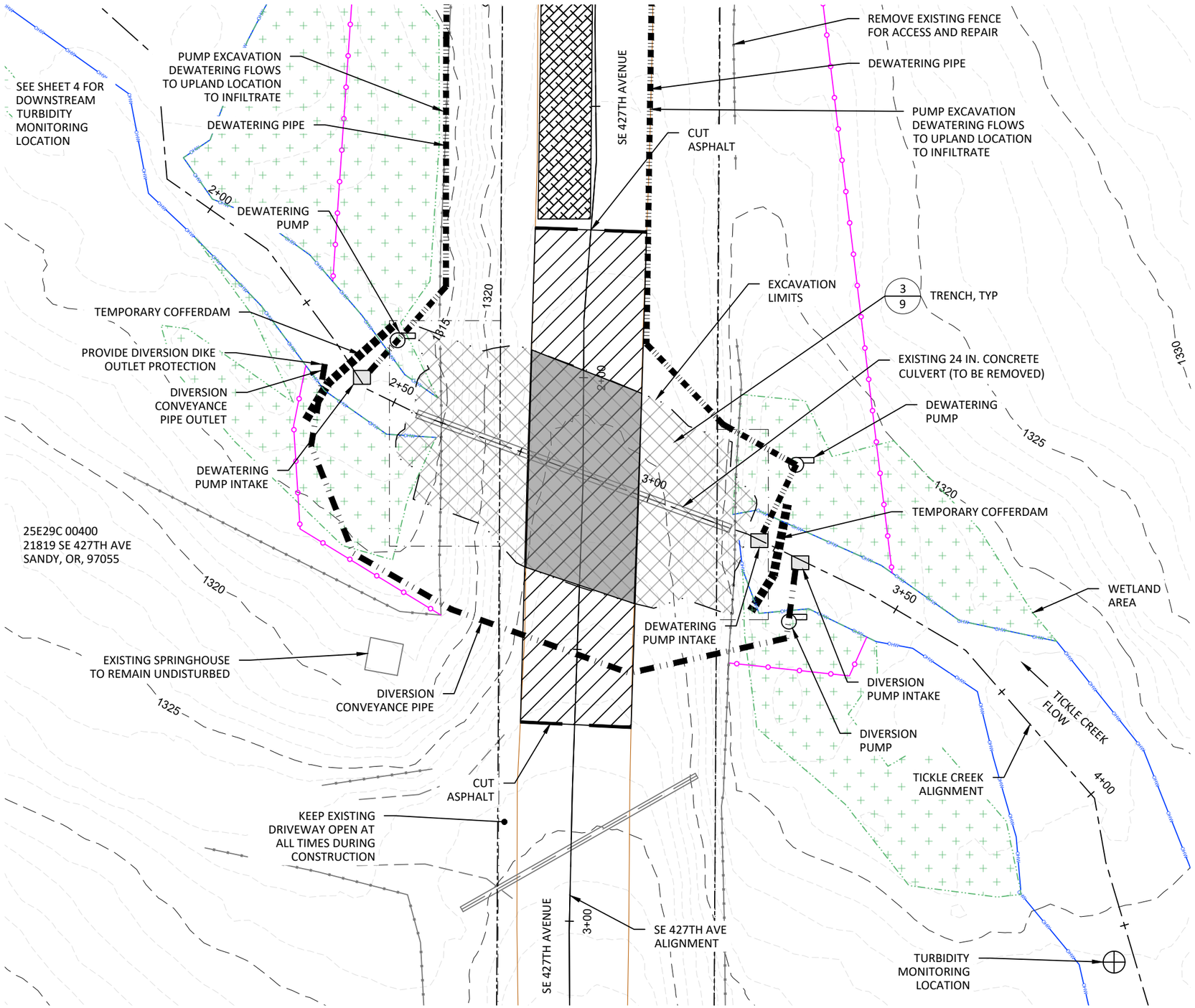

PLAN VIEW - EROSION CONTROL, STAGING, AND DIVERSION

N

0 20 40 Feet

NOTES:
ELEVATIONS ARE IN NAVD88.

LEGEND

- EXISTING CULVERT
- EXISTING CONTOURS
- EXISTING RIGHT OF WAY
- PERMANENT STORMWATER EASEMENT
- EDGE OF ASPHALT
- EXISTING FENCE
- CONSTRUCTION FENCE
- STAGING
- ORDINARY HIGH WATER (OHW)
- WETLAND AREA
- STRAW WATTLE
- DIVERSION PIPE
- DEWATERING PIPE
- COFFERDAM
- ASPHALT CUT LINE
- COLD PLANE PAVEMENT REMOVAL, 2 INCH DEPTH
- EXISTING ASPHALT, FULL THICKNESS REMOVAL
- EXCAVATION AREA
- PUMP
- PUMP INTAKE
- TURBIDITY MONITOR

REGISTERED PROFESSIONAL ENGINEER
18927PE
OREGON
FEB. 3, 1997
WILLIAM P. NORRIS
Expires: 12-31-2024

REV:	DESCRIPTION:	BY:	DATE:

STATUS: FINAL DESIGN

PARR excellence
302 W. Steuben St. #6
Bingen, WA 98605
www.morereddS.com

CLIENT:
Clackamas County
150 Beavercreek Road
Oregon City, OR 97045

SITE: Tickle Creek - 427th Avenue Culvert Replacement

TITLE: SITE MAP - EROSION CONTROL, STAGING, AND DIVERSION

SCALE:	DATE:	DRAWN:	CHECKED:
	5/15/2023	RP & PW	BN
PROJ. NO:	DRAWING NO:		Total Sheets:
-	5		13

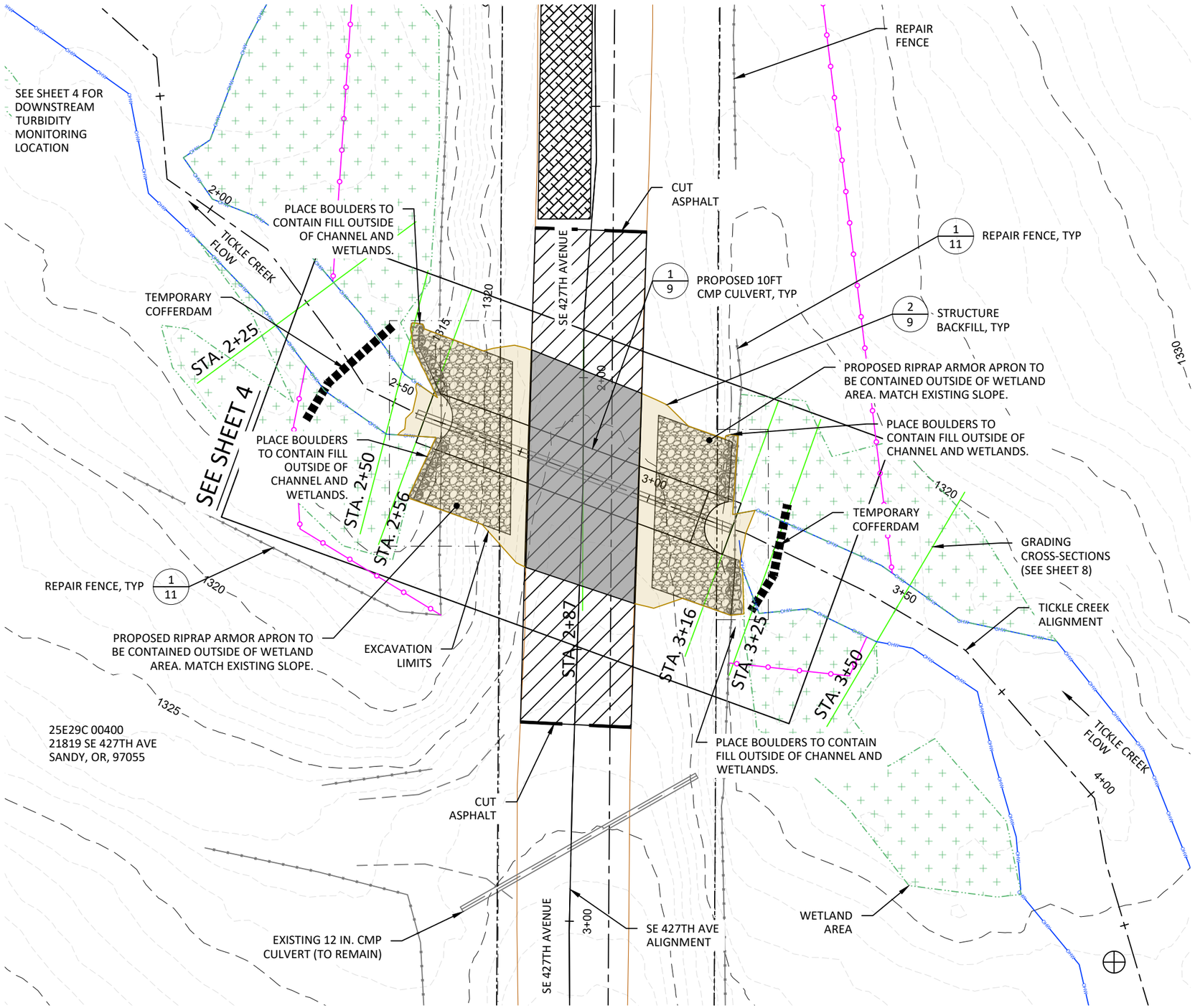

PLAN VIEW - PROPOSED CONDITIONS

N

0 20 40 Feet

NOTES:
ELEVATIONS ARE IN NAVD88.

LEGEND

- EXISTING CULVERT
- EXISTING CONTOURS
- EXISTING RIGHT OF WAY
- PERMANENT STORMWATER EASEMENT
- EDGE OF ASPHALT
- EXISTING FENCE
- CONSTRUCTION FENCE
- STAGING
- ORDINARY HIGH WATER (OHW)
- WETLAND AREA
- COFFERDAM
- ASPHALT CUT LINE
- 2-INCH ACP THICKNESS
- 6-INCH, MIN., ACP THICKNESS
- PLACED MATERIAL
- RIPRAP ARMOR APRON
- FISH BOULDER
- TURBIDITY MONITOR

REGISTERED PROFESSIONAL ENGINEER 18927PE OREGON FEB. 3, 1997 WILLIAM P. NORRIS
Expires: 12-31-2024

REV:	DESCRIPTION:	BY:	DATE:

STATUS: FINAL DESIGN

PARR excellence
302 W. Steuben St. #6
Bingen, WA 98605
www.morereddds.com

CLIENT:
Clackamas County
150 Beavercreek Road
Oregon City, OR 97045

SITE: Tickle Creek - 427th Avenue Culvert Replacement

TITLE: PLAN VIEW - PROPOSED CONDITIONS

SCALE:	DATE:	DRAWN:	CHECKED:
	5/15/2023	RP & PW	BN
PROJ. NO: -	DRAWING NO: 6		Total Sheets: 13

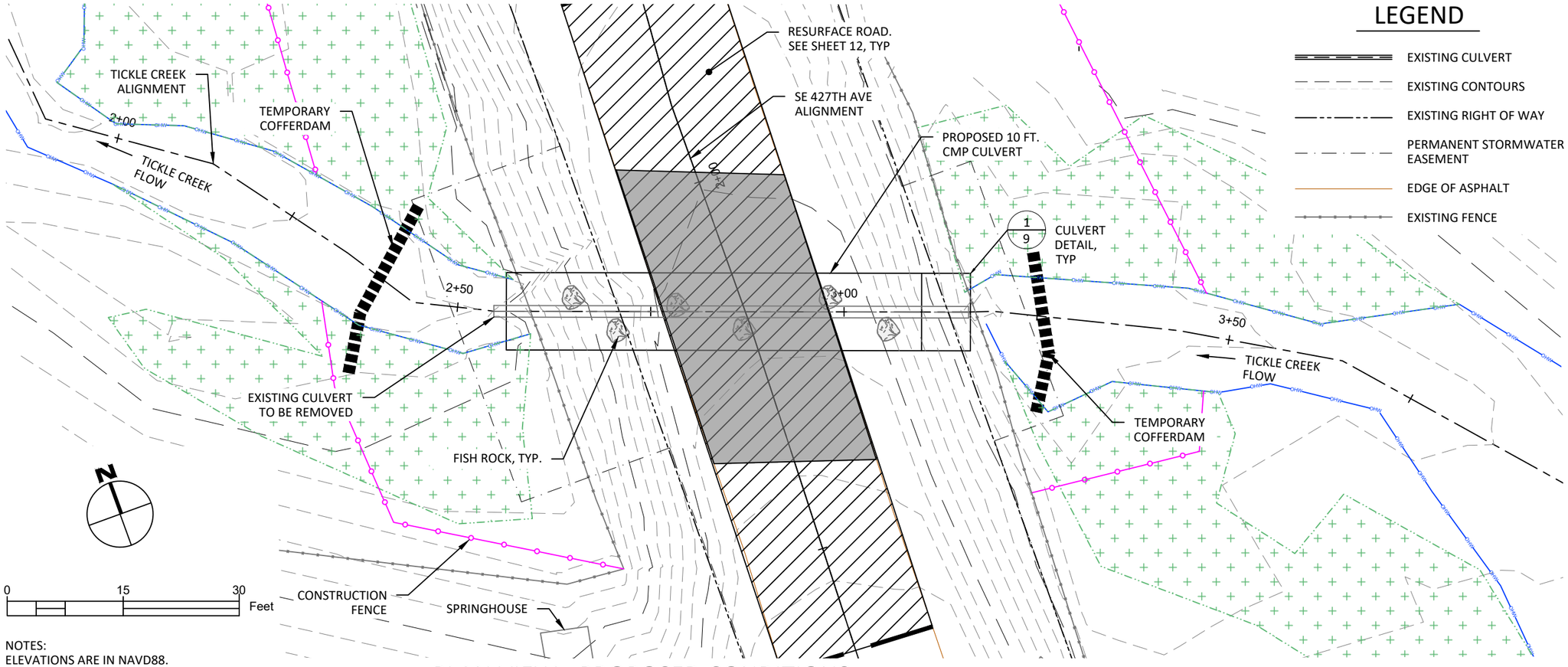

NOTES:
ELEVATIONS ARE IN NAVD88.

PLAN VIEW - PROPOSED CONDITIONS

LEGEND

- EXISTING CULVERT
- EXISTING CONTOURS
- EXISTING RIGHT OF WAY
- PERMANENT STORMWATER EASEMENT
- EDGE OF ASPHALT
- EXISTING FENCE
- CONSTRUCTION FENCE
- OHW — ORDINARY HIGH WATER (OHW)
- EDGE OF WETLAND
- INFILTRATION AREA
- COFFERDAM
- ASPHALT CUT LINE
- 2-INCH ACP THICKNESS
- 6-INCH, MIN., ACP THICKNESS
- RIPRAP ARMOR APRON
- FISH BOULDER

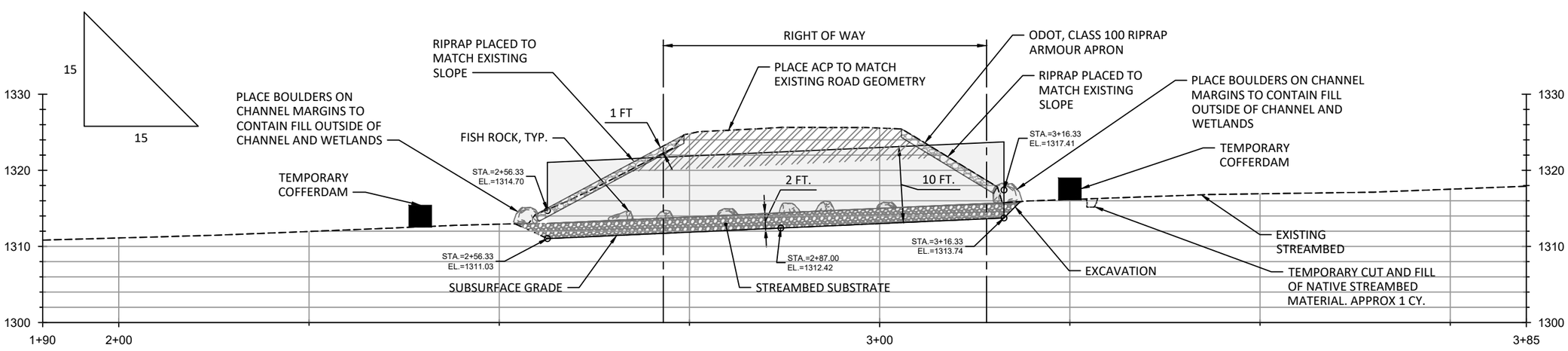

PROFILE VIEW - PROPOSED CONDITIONS

REGISTERED PROFESSIONAL ENGINEER
18927PE
OREGON
FEB. 3, 1997
WILLIAM P. NORRIS
Expires: 12-31-2024

REV:	DESCRIPTION:	BY:	DATE:

STATUS: FINAL DESIGN

PARR excellence
302 W. Steuben St. #6
Bingen, WA 98605
www.morereddS.com

CLIENT:
Clackamas County
150 Beavercreek Road
Oregon City, OR 97045

SITE: Tickle Creek - 427th Avenue Culvert Replacement

TITLE: PLAN AND PROFILE VIEW - PROPOSED CONDITIONS

SCALE:	DATE:	DRAWN:	CHECKED:
	5/15/2023	RP & PW	BN
PROJ. NO: -	DRAWING NO: 7		Total Sheets: 13

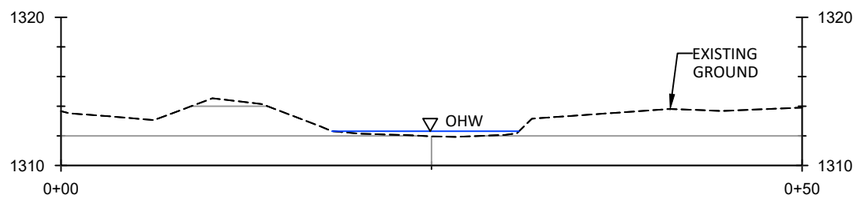

Cross–Section Sta. 2+25

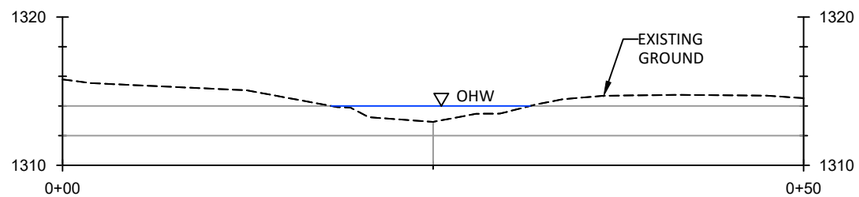

Cross–Section Sta. 2+50

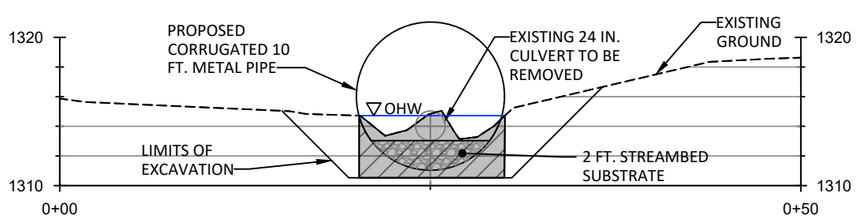

Cross–Section Sta. 2+56

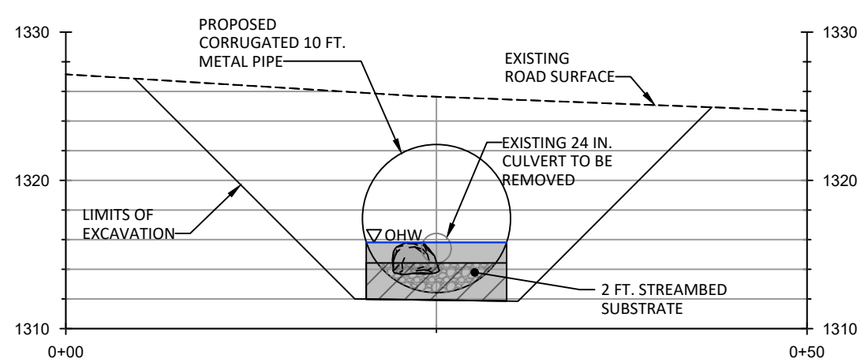

Cross–Section Sta. 2+87

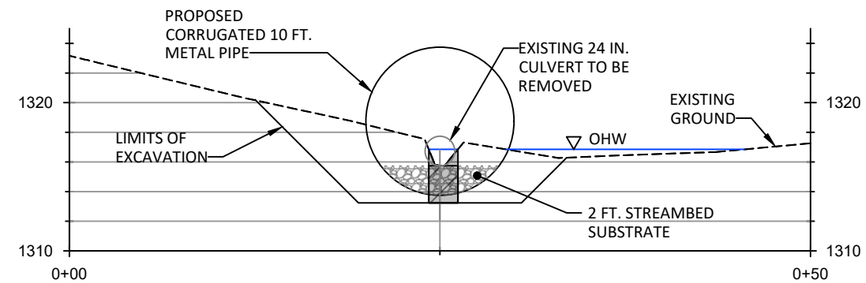

Cross–Section Sta. 3+16

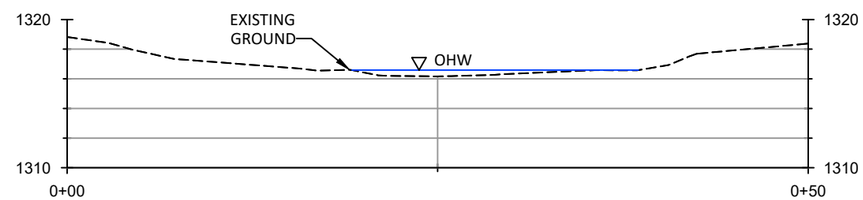

Cross–Section Sta. 3+25

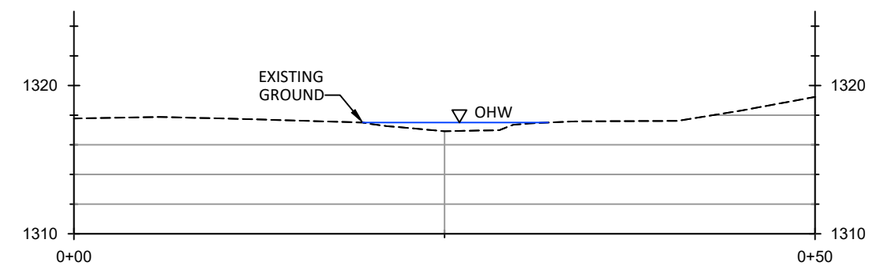

Cross–Section Sta. 3+50

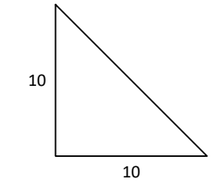

LEGEND

CUT BELOW ORDINARY HIGH WATER

FILL BELOW ORDINARY HIGH WATER

CUT VOLUME BELOW ORDINARY HIGH WATER				
START STA	END STA	LENGTH (FT)	AREA (SF)	VOL (CY)
2+51	2+56	5	50	10
2+56	3+16	60	56	125
3+16	3+21	5	10	2
			TOTAL	137

FILL VOLUME BELOW ORDINARY HIGH WATER							
START STA	END STA	LENGTH (FT)	AREA (SF)	VOLUME (CY)			
				SOIL	STREAMBED	FISH ROCK	TOTAL
2+51	2+56	5	40	3	5	0	8
2+56	3+16	60	8	34	57	1	92
3+16	3+21	5	41.5	0.5	1	0	1.5
			TOTAL	37.5	63	1	101.5

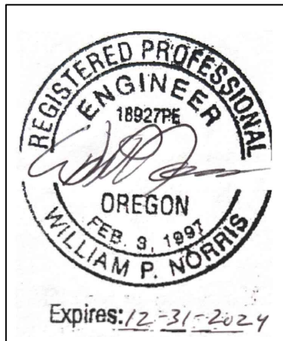

REV:	DESCRIPTION:	BY:	DATE:

STATUS: FINAL DESIGN

PARR excellence
302 W. Steuben St. #6
Bingen, WA 98605
www.moreredds.com

CLIENT: Clackamas County
150 Beavercreek Road
Oregon City, OR 97045

SITE: Tickle Creek - 427th Avenue Culvert Replacement

TITLE: GRADING CROSS-SECTIONS

SCALE:	DATE:	DRAWN:	CHECKED:
	5/15/2023	RP & PW	BN

PROJ. NO:	DRAWING NO:	Total Sheets:
-	8	13

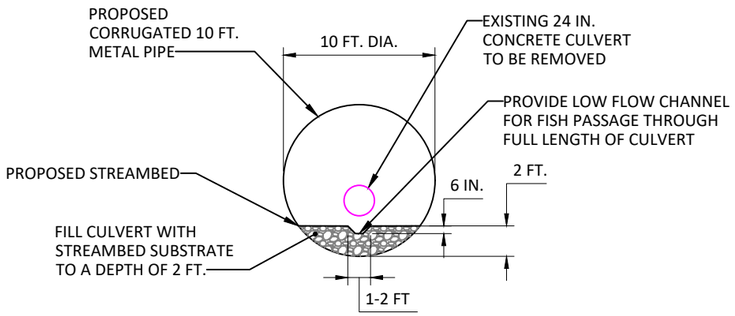

1/9 TYPICAL DETAIL - CULVERT INLET

NOT TO SCALE

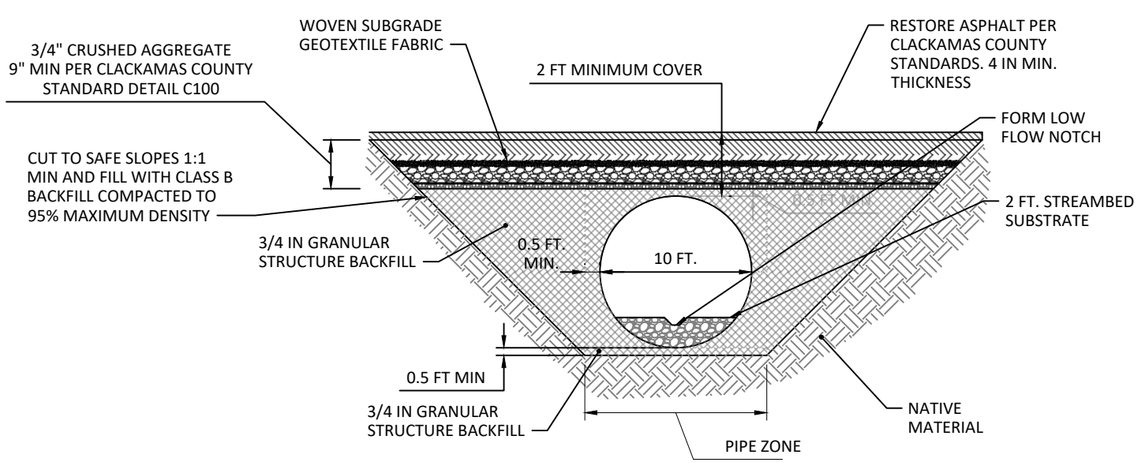

NOTES:

1. BACKFILL IN PIPE ZONE SHALL BE PLACED IN MAXIMUM 6" LIFTS AND COMPACTED.
2. TRENCH BACKFILL SHALL BE PLACED IN MAXIMUM 12" LIFTS TO 95% DENSITY.
3. RESTORE ACP SECTION WITH 4" OF HMAC LEVEL 2, PG 64-22, 1/2" DENSE GRADED AGGREGATE OR AN EQUAL THICKNESS OF THAT REMOVED WHICHEVER IS GREATER. ASLPHALT CONCRETE SHALL CONFORM TO THE REQUIREMENTS OF OREGON STANDARD SPECIFICATIONS SEC. 00744.40. ACP TO BE PLACED IN LIFTS BETWEEN 2" AND 3" IN THICKNESS.
4. ACP JOINTS/SEAMS SHALL BE SEALED WITH HOT LIQUID ASPHALT, OR APPROVED EQUAL, AND SANDED.
5. SEE SHEET 10 FOR STRUCTURE TRENCH DETAIL.

2/9 TYPICAL DETAIL - STRUCTURE EXCAVATION, BEDDING, AND BACKFILL

NOT TO SCALE

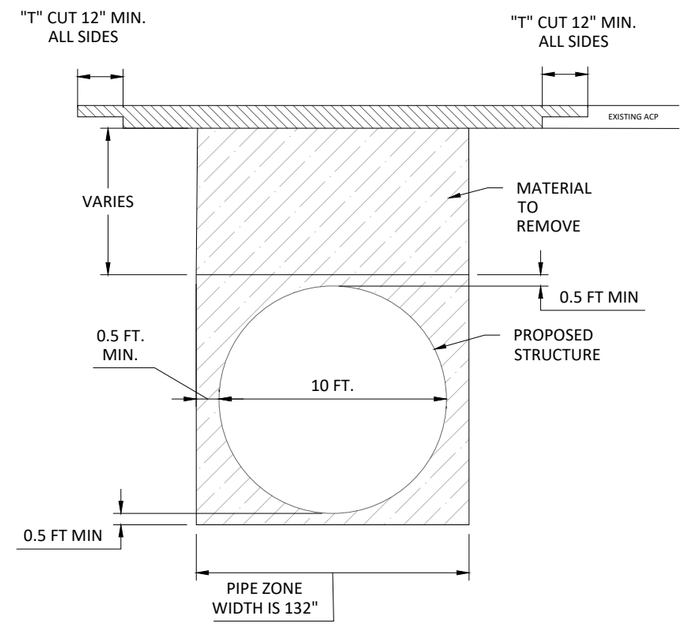

NOTES:

1. THE EXISTING ACP SHALL BE SAWCUT THROUGH ENTIRE ACP SECTION PRIOR TO EXCAVATION.
2. SAWCUT EDGES TO BE TACKED WITH HOT LIQUID ASPHALT.
3. WORK RESULTING IN IRREGULAR TRENCH WIDTHS OR INCIDENTAL DAMAGE TO THE ROADWAY SURFACE WILL REQUIRE ANOTHER SAWCUT AND SUBSEQUENT REMOVAL OF ACP. THE SAWCUT LINE SHALL BE APPROVED BY CLACKAMAS COUNTY PRIOR TO THE PERMANENT ACP REPAIR.
4. CLACKAMAS COUNTY SHALL BE NOTIFIED FOR INSPECTION.
5. SEE SHEET 9 FOR STRUCTURE EXCAVATION, BEDDING, AND BACKFILL.

3/9 TYPICAL DETAIL - STRUCTURE TRENCH

NOT TO SCALE

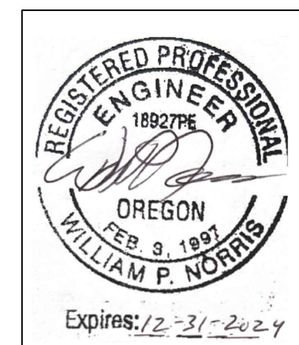

REV:	DESCRIPTION:	BY:	DATE:
STATUS: FINAL DESIGN			

PARR excellence
302 W. Steuben St. #6
Bingen, WA 98605
www.moreredds.com

CLIENT:
Clackamas County
150 Beavercreek Road
Oregon City, OR 97045

SITE: Tickle Creek - 427th Avenue Culvert Replacement

TITLE: TYPICAL DETAILS

SCALE:	DATE:	DRAWN:	CHECKED:
	5/15/2023	RP & PW	BN
PROJ. NO: -	DRAWING NO: 9		Total Sheets: 13

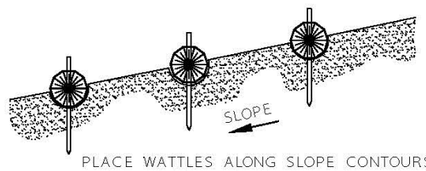

PLACE WATTLES ALONG SLOPE CONTOURS.

PROFILE

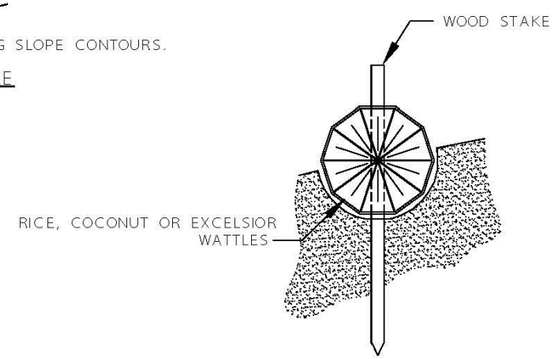

SECTION

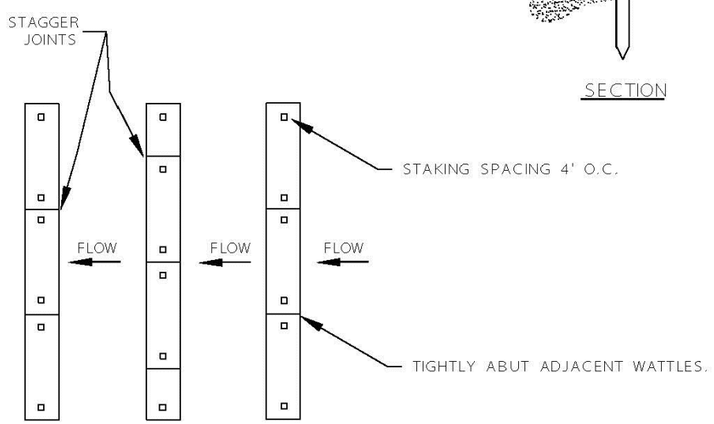

PLAN VIEW

NOTES:

1. STAKING SPECIFICATIONS:
   a. 1"X2" WOODEN STAKES
   b. ADDITIONAL STAKES MAY BE INSTALLED ON DOWNHILL SIDE OF WATTLES, ON STEEP SLOPE OR HIGHLY EROSIVE SOILS.
2. SPACING IN ACCORDANCE WITH DETAIL 940.

WATTLES

DETAIL DRAWING 4 - 27 REVISED 01 - 09

1/10 TYPICAL DETAIL - STRAW WATTLES

NOT TO SCALE

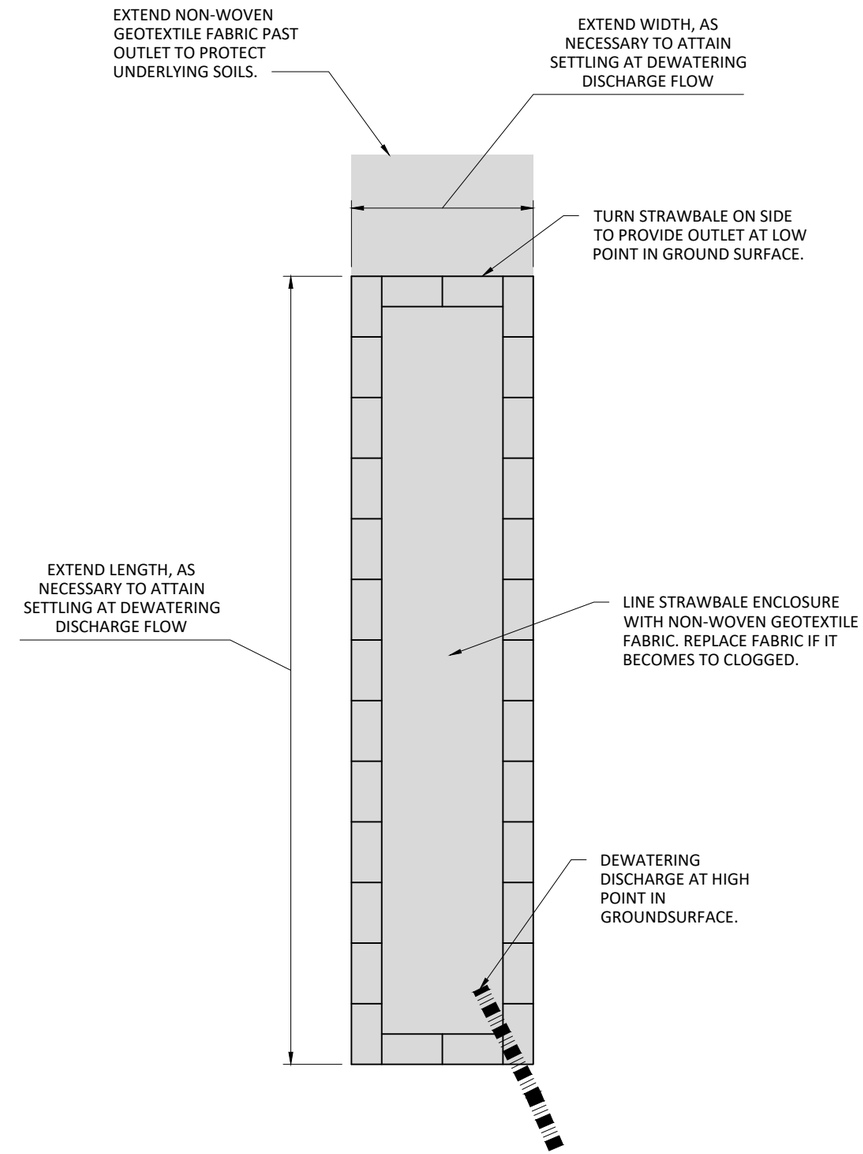

2/10 TYPICAL DETAIL - STRAWBALE SETTLING BASIN

NOT TO SCALE

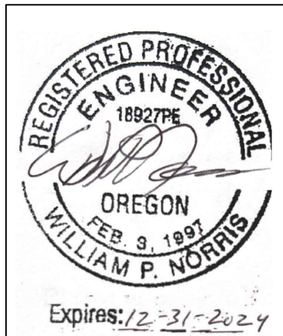

REV:	DESCRIPTION:	BY:	DATE:

STATUS: FINAL DESIGN

PARR excellence
302 W. Steuben St. #6
Bingen, WA 98605
www.moreredds.com

CLIENT: Clackamas County
150 Beavercreek Road
Oregon City, OR 97045

SITE: Tickle Creek - 427th Avenue Culvert Replacement

TITLE: TYPICAL DETAILS

SCALE:	DATE:	DRAWN:	CHECKED:
	5/15/2023	RP & PW	BN
PROJ. NO:	DRAWING NO:		Total Sheets:
-	10		13

NOTES:

1. CONTRACTOR SHALL ONLY REMOVE AND REPLACE METAL TEE POSTS FOR TEMPORARY ACCESS.
2. EXISTING FENCE POSTS TO REMAIN UNDISTURBED INCLUDE CREOSOTE FENCE POSTS, TREES, AND WOODEN FENCE POSTS.
3. THE STRUCTURE FENCE POSTS ARE TO BE LOCATED DOWNSTREAM AND NEARLY TOUCHING THE PROPERTY FENCE.

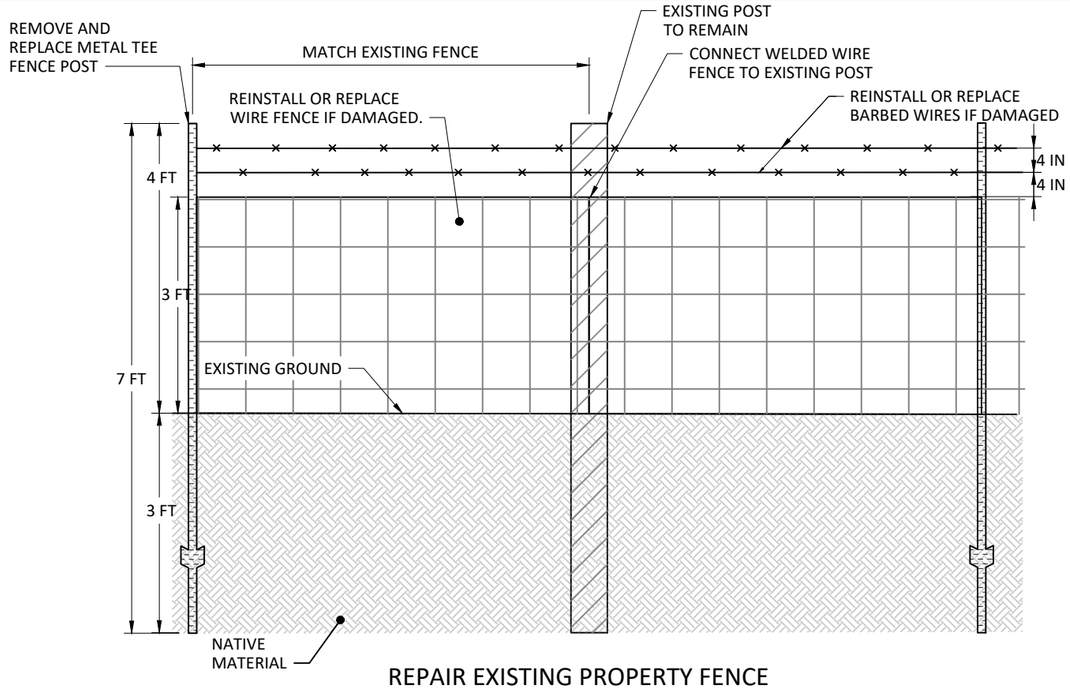

REPAIR EXISTING PROPERTY FENCE

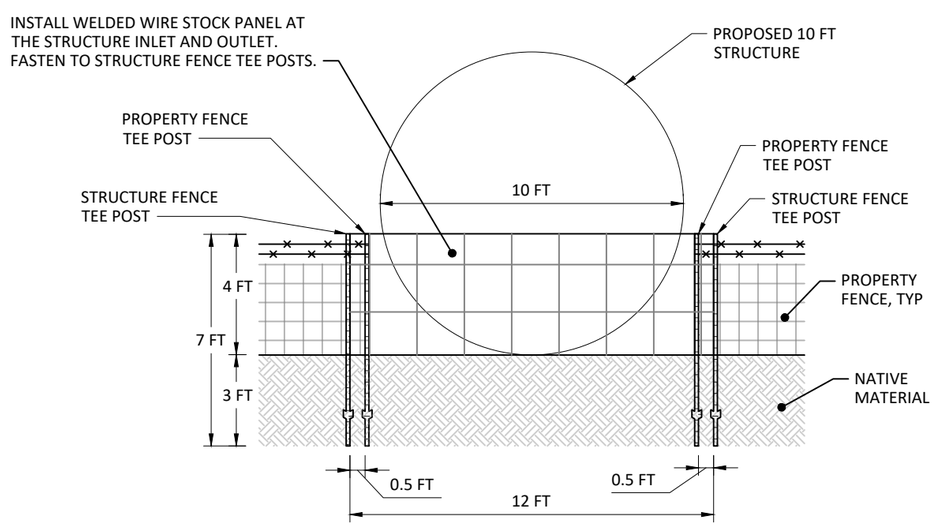

REPLACE STRUCTURE FENCE AT INLET AND OUTLET

1/11 TYPICAL DETAIL - FENCE REPAIR OR REPLACE

NOT TO SCALE

REGISTERED PROFESSIONAL ENGINEER 18927PE OREGON FEB. 3, 1997 WILLIAM P. NORRIS

Expires: 12-31-2024

REV:	DESCRIPTION:	BY:	DATE:

STATUS: FINAL DESIGN

PARR excellence
302 W. Steuben St. #6
Bingen, WA 98605
www.moreredds.com

CLIENT: Clackamas County
150 Beavercreek Road
Oregon City, OR 97045

SITE: Tickle Creek - 427th Avenue Culvert Replacement

TITLE: TYPICAL DETAILS

SCALE:	DATE:	DRAWN:	CHECKED:
	5/15/2023	RP & PW	BN

PROJ. NO:	DRAWING NO:	Total Sheets:
-	11	13

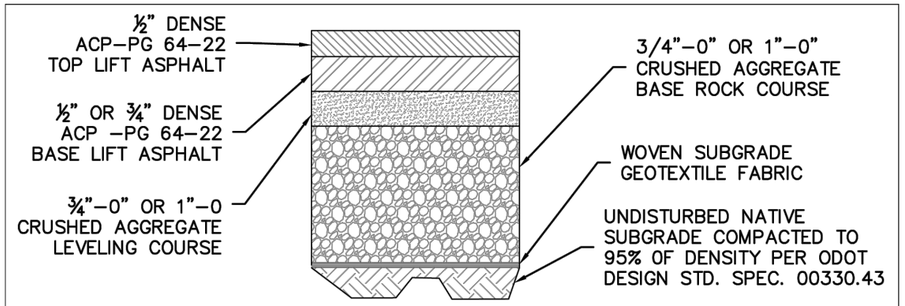

ASPHALTIC CONCRETE STANDARD STRUCTURAL SECTION

FUNTIONAL CLASSIFICATION	LEVEL ACP	ACP DEPTH (IN.)	AGGREGATE LEVELING COURSE DEPTH (IN.)	AGGREGATE BASE COURSE DEPTH (IN.)
LOCAL	2	4	3	6
CONNECTOR	2	4	3	6
COLLECTOR	3	6	4	10
LOCAL, CONNECTOR, OR COLLECTOR SERVING COMMERCIAL	3	7–1/2	4	10
MINOR/MAJOR ARTERIALS	3	7–1/2	4	10

NOTES

1. THE STREET SECTIONS ARE A MINIMUM. IF THE EXISTING STREET SECTION IS GREATER THAN THE MINIMUM REQUIRED, THE PROPOSED STREET SECTION SHALL BE CONSTRUCTED IN KIND. THE ENGINEER OF RECORD IS RESPONSIBLE FOR AN ADEQUATE STRUCTURAL SECTION.
2. FOR IMPROVEMENTS TO EXISTING STREETS, SAW CUT LINE SHALL BE APPROVED BY COUNTY ENGINEERING STAFF PRIOR TO COMMENCEMENT OF WORK, AND MAY BE REQUIRED TO EXCEED CENTERLINE. THE SAWCUT LOCATION SHALL NOT BE LOCATED IN A WHEEL TRACK.
3. ASPHALTIC CONCRETE SHALL CONFORM TO THE REQUIREMENTS OF OREGON STANDARD SPECIFICATIONS SEC. 00744.40. ACP TO BE PLACED IN LIFTS BETWEEN 2 INCHES AND 3 INCHES IN THICKNESS.
4. WITHIN A DEVELOPMENT, THE FINAL LIFT OF ASPHALTIC CONCRETE SHALL NOT BE PLACED ON LOCAL STREETS UNTIL ALL UTILITIES WITHIN THE ROADWAY HAVE BEEN ACCEPTED AND ALL CURB REPAIRS COMPLETED.
5. MATERIAL AND INSTALLATION SHALL CONFORM TO CURRENT OREGON STANDARD SPECIFICATIONS AND MANUFACTURER'S RECOMMENDATIONS.
6. THE WIDTH AND EXTENT OF THE IMPROVEMENT SHALL BE DETERMINED BY ENGINEERING ACCORDING TO STREET CLASSIFICATION.
7. CRUSHED AGGREGATE USED FOR BASE ROCK AND LEVELING COURSE SHALL CONFORM TO THE REQUIREMENTS OF OREGON STANDARD SPECIFICATIONS SEC. 02630.

REVISION	DATE	BY
REVISED	11/19	BP
REVISED	12/19	SC
REVISED	3/20	RM

DEPARTMENT OF TRANSPORTATION AND DEVELOPMENT
150 BEAVERCREEK ROAD
OREGON CITY, OR 97045

CLACKAMAS COUNTY

APPROVAL DATE: 6/1/2020 SCALE: N.T.S.

STREET STRUCTURAL SECTION

STANDARD DRAWING C100

NOTE:

1. Locate As Directed By The Engineer.

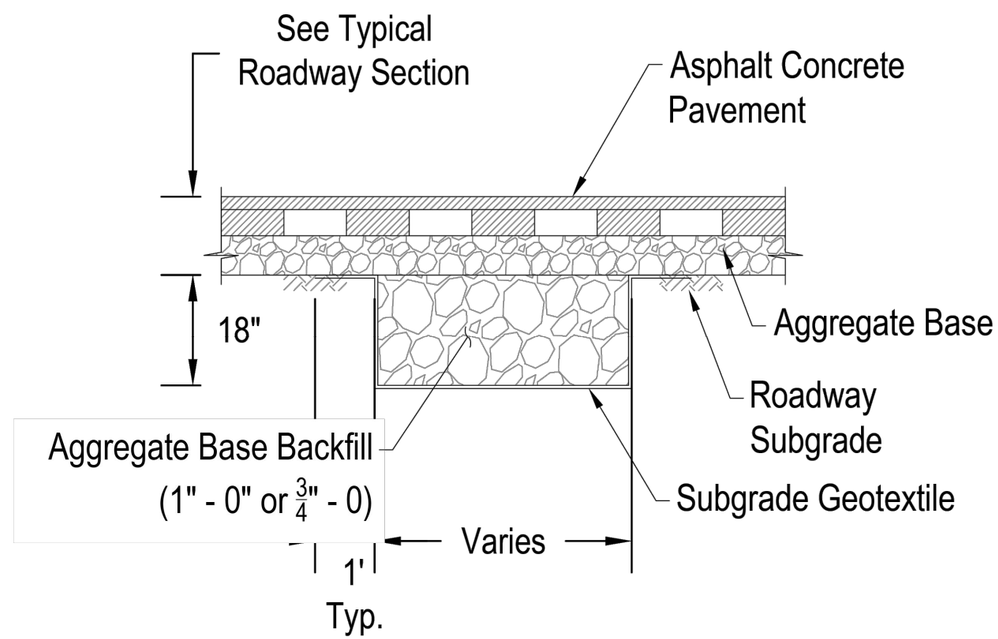

18 INCH SUBGRADE STABILIZATION

Not to Scale

REGISTERED PROFESSIONAL ENGINEER 18927PE OREGON FEB. 3, 1997 WILLIAM P. NORRIS

Expires: 12-31-2024

REV:	DESCRIPTION:	BY:	DATE:
STATUS: FINAL DESIGN			

PARR excellence
302 W. Steuben St. #6
Bingen, WA 98605
www.moreredds.com

CLIENT: Clackamas County
150 Beavercreek Road
Oregon City, OR 97045

SITE: Tickle Creek - 427th Avenue Culvert Replacement

TITLE: TYPICAL DETAILS

SCALE:	DATE:	DRAWN:	CHECKED:
	5/15/2023	RP & PW	BN

PROJ. NO:	DRAWING NO:	Total Sheets:
-	12	13

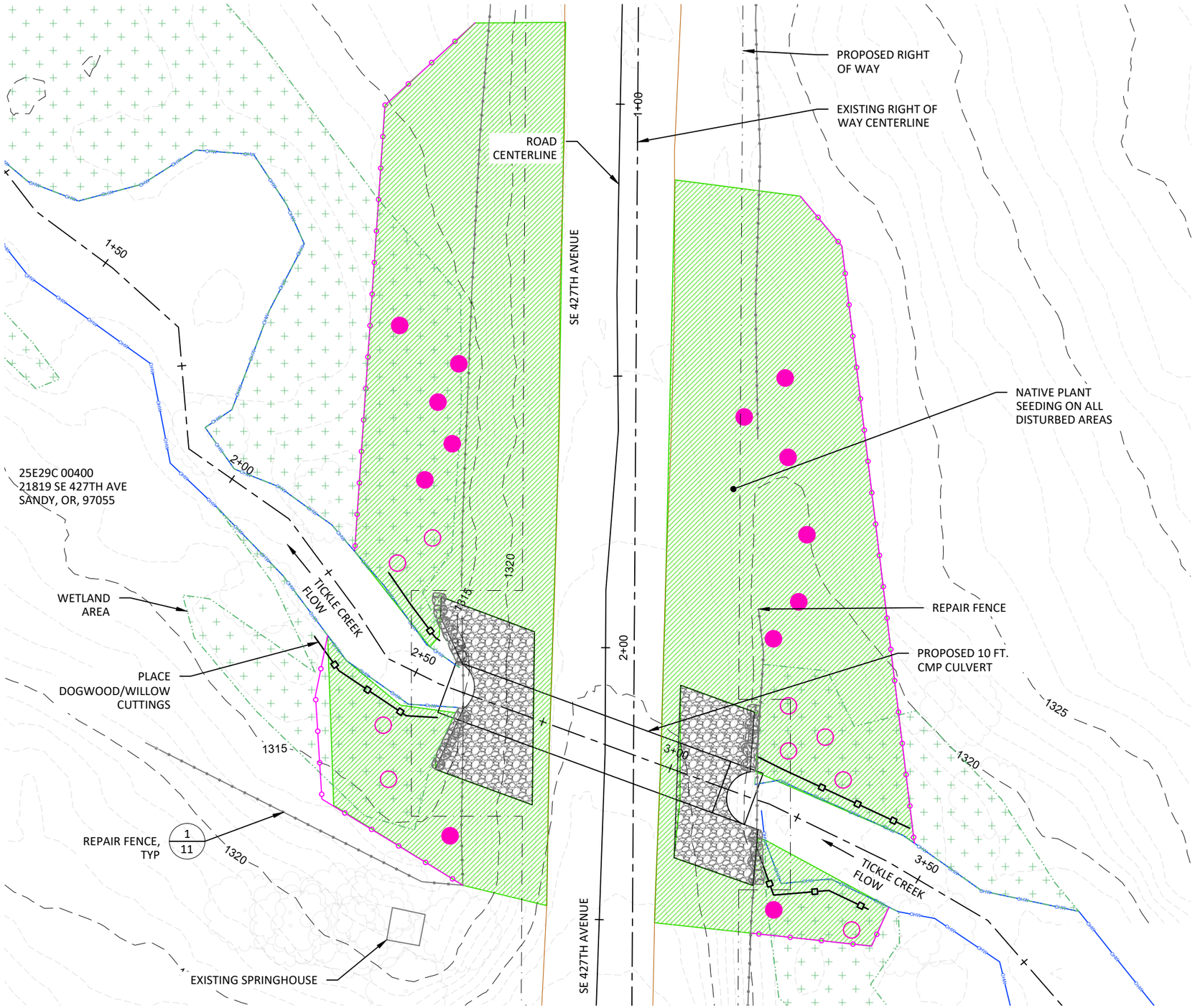

PLAN VIEW - PROPOSED CONDITIONS

N

0 20 40 Feet

NOTES:
ELEVATIONS ARE IN NAVD88.

LEGEND

- EXISTING CONTOURS
- PERMANENT STORMWATER EASEMENT
- EDGE OF ASPHALT
- TICKLE CREEK ALIGNMENT
- EXISTING FENCE
- CONSTRUCTION FENCE
- OHW — ORDINARY HIGH WATER (OHW)
- WETLAND AREA
- RIPRAP ARMOR APRON
- REVEGETATION AREA - SEED
- WETLAND PLANTING
- APPROX DOUGLAS FIR PLANTING LOCATION
- APPROX WESTERN RED CEDAR PLANTING LOCATION
- EXISTING TREE

REGISTERED PROFESSIONAL ENGINEER
18927PE
OREGON
FEB. 3, 1997
WILLIAM P. NORRIS
Expires: 12-31-2024

REV:	DESCRIPTION:	BY:	DATE:
STATUS: FINAL DESIGN			

PARR excellence
302 W. Steuben St. #6
Bingen, WA 98605
www.moreredds.com

CLIENT:
Clackamas County
150 Beavercreek Road
Oregon City, OR 97045

SITE: Tickle Creek - 427th Avenue Culvert Replacement

TITLE: PLAN VIEW - REVEGETATION

SCALE:	DATE:	DRAWN:	CHECKED:
	5/15/2023	RP & PW	BN
PROJ. NO: -	DRAWING NO: 13		Total Sheets: 13