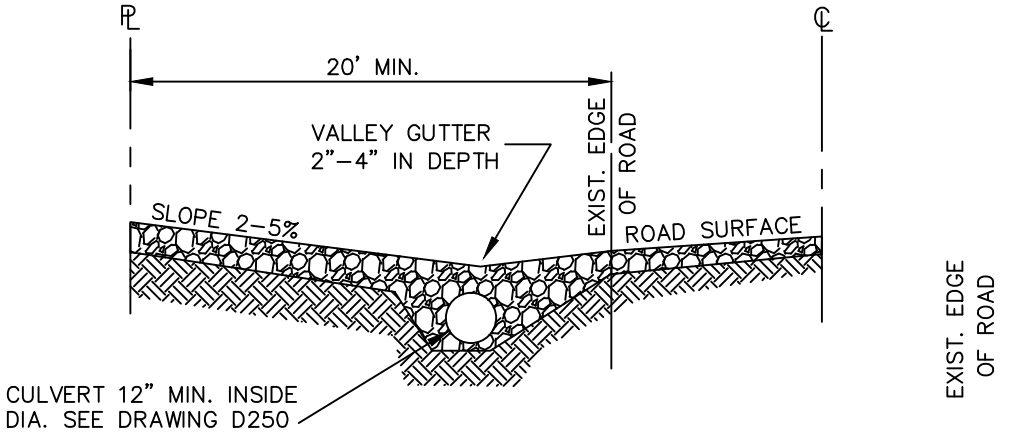

SECTION A–A
UNPAVED DRIVEWAY

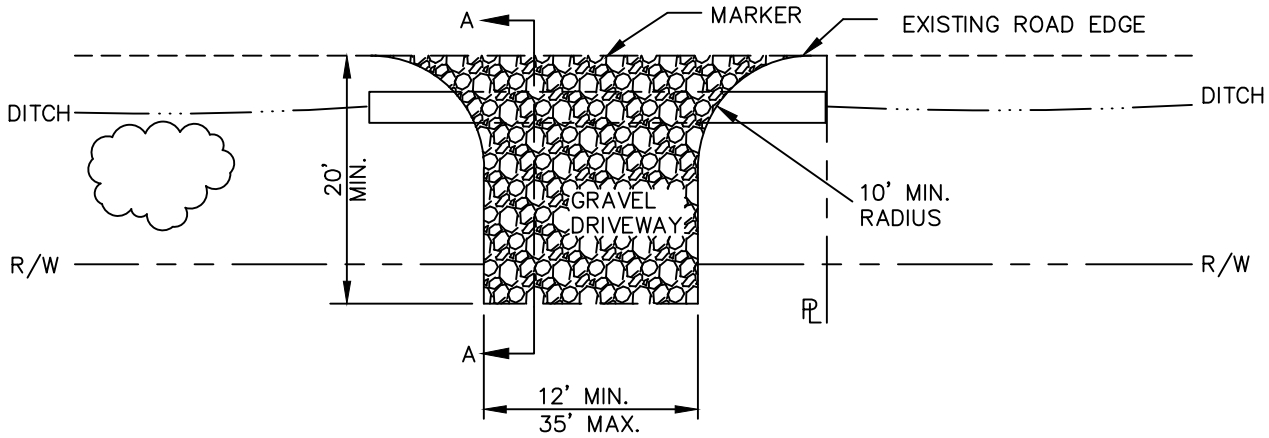

DRIVEWAY ENTRY

NOTES

1. LOCATION AND DIMENSIONS TO BE APPROVED BY THE COUNTY ON A SITE SPECIFIC BASIS. PLACE A MARKER, AS INDICATED, AT THE CENTER OF THE PROPOSED DRIVEWAY FOR INITIAL INSPECTION BY THE COUNTY. NO PORTION OF THE DRIVEWAY MAY BE PLACED ON AN ADJOINING PROPERTY.
2. SPECIFICATIONS FOR MATERIALS USED IN CONSTRUCTION SHALL CONFORM TO CURRENT ODOT/APWA STANDARD SPECIFICATIONS.
3. AT CORNER LOTS, DRIVEWAY ENTRANCE MUST BE PLACED ON THE SECONDARY ROADWAY.
4. NO PORTION OF A DRIVEWAY SHALL BE PERMITTED WITHIN 2 FEET OF A PROPERTY LINE OR WITHIN 25 FEET OF THE INTERSECTION OF RIGHT–OF–WAY LINES.
5. A MINIMUM OF 50 FEET MUST SEPARATE DRIVEWAY APPROACHES (CENTERLINE TO CENTERLINE) FOR CIRCULAR DRIVEWAYS.
6. INSTALL CULVERT PIPE PER STANDARD DRAWING D250, IF REQUIRED.
7. PROVIDE SIGHT DISTANCE PER STANDARD DRAWING T300 & SECTION 240.
8. A MINIMUM OF 25 FEET MUST SEPARATE DRIVEWAY APPROACHES (CENTERLINE TO CENTERLINE) ON PREMISES UNDER ONE OWNERSHIP. GREATER SEPARATION MAY BE REQUIRED PER SECTION 220.
9. DRIVEWAY SHALL INTERSECT ROAD AT A 80–100 DEGREE ANGLE.
10. SEE DRAWING R100 FOR STRUCTURAL SECTION REQUIREMENTS.

REVISION	DATE	BY
NOTE 10 EDIT	12/12	RN

DEPARTMENT OF TRANSPORTATION AND DEVELOPMENT
150 BEAVERCREEK ROAD
OREGON CITY, OR 97045

CLACKAMAS COUNTY

APPROVAL DATE: 2/1/13 SCALE: N.T.S.

STANDARD DRIVEWAY ENTRY ONTO UNPAVED COUNTY ROADS

STANDARD DRAWING
D400