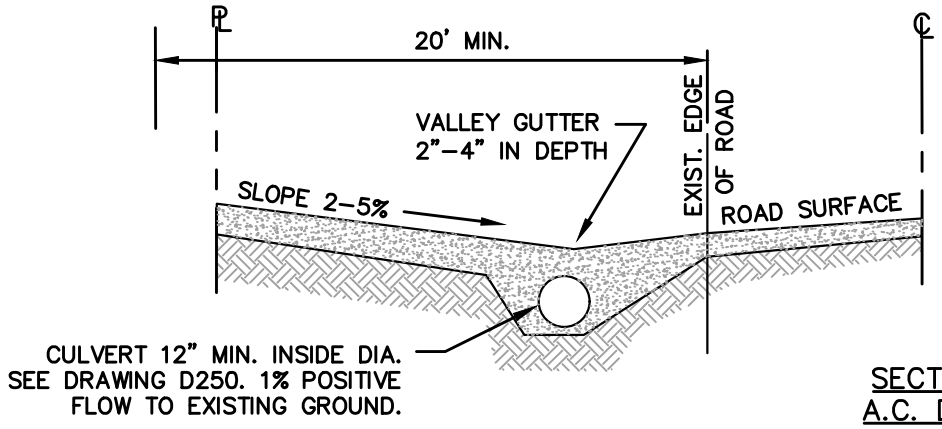

SECTION A–A
A.C. DRIVEWAY

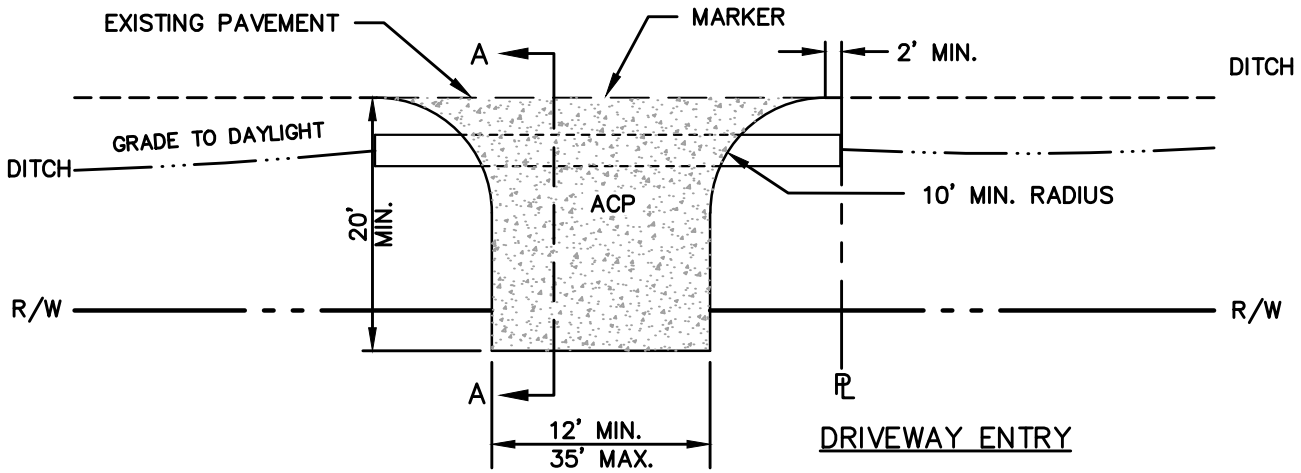

DRIVEWAY ENTRY

NOTES

1. LOCATION AND DIMENSIONS TO BE APPROVED BY THE COUNTY ON A SITE SPECIFIC BASIS. PLACE A MARKER, AS INDICATED, AT THE CENTER OF THE PROPOSED DRIVEWAY FOR INITIAL INSPECTION BY THE COUNTY. NO PORTION OF THE DRIVEWAY MAY BE PLACED ON AN ADJOINING FRONTAGE.
2. SPECIFICATIONS FOR MATERIALS USED IN CONSTRUCTION SHALL CONFORM TO CURRENT ODOT/APWA STANDARD SPECIFICATIONS.
3. AT CORNER LOTS, DRIVEWAY ENTRANCE MUST BE PLACED ON THE SECONDARY ROADWAY IN URBAN AREAS AND ON ROADS WITH MORE THAN 7,500 ADT IN THE RURAL AREA.
4. SEE SECTION 220 FOR ACCESS SPACING BETWEEN DRIVEWAYS, TO AN INTERSECTION AND TO A PROPERTY LINE ALSO FOR MULTIPLE ACCESSES TO ON PROPERTY.
5. MEET SPACING STANDARDS PER SECTION 220.
6. IF A CULVERT IS REQUIRED, INSTALL CULVERT PIPE PER STANDARD DRAWING D250.
7. PROVIDE SIGHT DISTANCE PER SECTION 240.
8. DRIVEWAY SHALL INTERSECT ROAD AT A 90 DEGREE ANGLE.
9. DRIVEWAY APPROACH SHALL MEET STRUCTURAL SECTION PER R100.

REVISION	DATE	BY
REVISED	11/19	AAR

DEPARTMENT OF TRANSPORTATION AND DEVELOPMENT
150 BEAVERCREEK ROAD
OREGON CITY, OR 97045

CLACKAMAS COUNTY

APPROVAL DATE: 6/1/2020 SCALE: N.T.S.

STANDARD DRIVEWAY ENTRY ONTO PAVED COUNTY ROADS WITH NO CURBS

STANDARD DRAWING
D500